“

2026

ETKİ LNG TERMINAL

TERMINAL INFORMATION AND REGULATIONS for FSRU and LNGC

This booklet contains the regulations and general information for the ETKİ LNG TERMINAL located at Aliağa Industrial Area in Turkey. This booklet is not intended to supersede wholly or partially any hydrographic or other official publication, nor should it be used without reference to such publications where appropriate. In addition to these Terminal Regulations all applicable governmental regulations shall be adhered to.

PREFACE

This booklet contains the regulations and general information for the ETKİ LNG TERMINAL located at Aliağa Industrial Area in Turkey. This booklet is not intended to supersede wholly or partially any hydrographic or other official publication, nor should it be used without reference to such publications where appropriate.

In addition to these Terminal Regulations all applicable governmental regulations shall be adhered to.

The following publications, (including amendments and new versions as applicable), shall be used in conjunction with these Regulations:

- The International Safety Guide for Oil Tankers and Terminals (ISGOTT), Latest Edition, ICS/OCIMF/IAPH
- Tanker Safety Guide (Liquefied Gas), Latest Edition, ICS
- Liquefied Gas Handling Principals on Ships and in Terminals, Latest Edition, SIGTTO
- LNG Operations in Port Areas, Latest Edition, SIGTTO
- Ship to Ship Transfer Guide for Petroleum, Chemicals and Liquefied Gases, Latest Edition, ICS/OCIMF/SIGTTO
- ISO 17177: Guidelines for Marine Interfaces of Hybrid LNG Terminals,
- Port Regulations

The information contained herein is believed to be correct at time of issue.

THE INFORMATION CONTAINED IN THIS DOCUMENT IS NOT INTENDED FOR USE IN NAVIGATION & TERMINAL HAS NO LIABILITY.

Contents

1. INTRODUCTION 3
2. DEFINITIONS 3
3. LOCATION AND GENERAL INFORMATION 6
4. DETAILS OF THE TERMINAL AND BERTH 6
5. PORT LAYOUT AND BATHYMETRY 8
6. ENVIRONMENTAL CONDITION 10
7. LNG CARRIER DOMESTIC MATTERS 10
8. COMMUNICATION INFORMATION 11
9. PILOTAGE & TUG BOATS 13
10. BERTHING & UNBERTHING OPERATIONS & CRITERIAS 13
11. BERTHING APPROACH 14
12. MOORING AND MOORING ARRANGEMENT 16
13. ENVIRONMENTAL LIMITS 19
14. SHIP TO SHIP (STS) OPERATIONS 19
15. PRE-TRANSFER OPERATIONS 20
16. CARGO TRANSFER OPERATIONS 36
17. ACCESS BETWEEN THE FSRU & LNGC 40
18. LNG CARRIER EMERGENCY ESCAPE 41
19. SECURITY ISPS 42
20. SAFETY 42
21. HAZARD SITUATIONS & EMERGENCY RESPONSE 42
22. THREAT TO SURROUNDING AREA / EVACUATION ROUTES 48
23. ENVIRONMENTAL PROTECTION 48
ANNEX AAA - NAVIGATION CHART FOR ETKİ LNG TERMINAL 50
ANNEX BBB - FSRU - GENERAL ARRANGEMENT 51
ANNEX CCC - FIRE NOTICE 52
ANNEX DDD - RECEIPT OF TERMINAL REGULATION FOR VESSELS 53
ANNEX EEE - TERMINAL PASSES 54
ANNEX FFF - CONDITIONS OF USE for LNG CARRIERS 1

1. INTRODUCTION

The following information and terminal regulations shall apply to any or all parts of ETKİ LNG Terminal which is owned and operated by ETKİ Liman İşletmeleri Doğalgaz İthalat ve Ticaret A.Ş. and to all vessels moored alongside or using the ETKİ LNG TERMINAL. This govern the private law relationships between ETKİ LNG TERMINAL and the users.

In addition to this, the applicable Turkish Law, in particular the regulations for ports in the land of Turkey - Ports Regulations, as amended, as well as the Maritime Traffic Regulations, and Notices to Mariners shall be monitored and followed.

They are in addition to and not in abrogation of or substitution for the provisions of:

- In general, all/any relevant laws and bylaws in force in Turkey.
- Customs Regulations.
- All/any relevant Maritime Regulations, in force.
- Harbour Master's orders and instructions, if any.
- Any other general legislation affecting the Terminal or vessel using the same.

Only such gas vessels, which comply with the recommendations of IMO and have a valid fitness certificate relating to:

- Resolution A.328 (ix) code for the construction and equipment of ships carrying liquefied gas in bulk.
- Resolution A.329 (ix) recommendations concerning ships not covered by the code for the construction and equipment of ships carrying liquefied gases in bulk.
- Code for existing ships carrying liquefied gases in bulk.

2. DEFINITIONS

- APPROVAL & VETTING PROCEDURES: means the LNG Carrier Approval & Vetting Procedures for the Terminal as detailed in the following documents attached hereto as appendices:
    - SCHEDULING PROCEDURE FOR INCOMING CARGO TO THE FSRU
    - VETTING CRITERIA AND OPERATING STANDARDS FOR LNG VESSELS
    - LNG SHIP ACCESS TO PARDUS ENERGY LNG FSRU SIDE BY SIDE OPERATION

- CARGO HANDLING MANUAL: means the "Cargo Handling Manual" for the Terminal accessible on FSRU TURQUOISE P CARGO HANDLING MANUAL.

- CNG: compressed natural gas, produced on board FSRU and exported to shore at a high pressure via dedicated Marine Loading Arms ("MLA")

- CREW: means all personnel operating and serving aboard the LNG Carrier, including the Master, officers and ratings.

- ESD: means emergency shutdown.

- ESD CNG: safety function that shuts down operations related to ReGas plant of the FSRU and gas export to the Terminal. It can be activated either by Terminal or the FSRU.

- ESD LNG: safety function that shuts down operations related to transfer of bulk LNG between LNGC and FSRU. It can be activated either by LNGC or by FSRU and will not affect the ReGas operations and send-out.

- ETA: means the estimated time of arrival of an LNG Carrier at the Pilot Boarding Station.
- FSRU: means FSRU TURQUOISE P, geographically located at the coordinates provided for in Article 4. including berth area and other facilities.
- FSRU TURQUOISE P: means the LNG floating storage and regasification unit having IMO number 9823883 owned by Pardus Energy Ltd., Ireland.
- FSRU MANAGER: means Master of the FSRU, with day-to-day overall responsibility for managing the FSRU.
- FSRU OPERATOR: means the company appointed and authorized by ETKİ LNG Terminal to perform the management and technical operation of the FSRU in accordance with the ISM Code and ISO 9001 and 14001.
- FSRU PERSONNEL: means the personnel operating on board the FSRU, the number, responsibilities, duties and preparation of which have been stated by the Maritime Authorities.
- FSRU SOPEP PLAN: means the FSRU's shipboard oil pollution emergency plan produced in accordance with the International Convention for the Prevention of Pollution from Ships (MARPOL) as amended.
- INTERNATIONAL STANDARDS: means the standards and practices in force and applicable to the ownership, design, equipment, operation or maintenance of LNG Carriers established by the rules of a classification society (being a member of the International Association of Classification Societies (IACS) or as may otherwise be acceptable to ETKİ LNG Terminal), the conventions, rules, guidelines and regulations enacted by the International Maritime Organization (IMO), the Oil Companies International Marine Forum (OCIMF), International Group of Liquefied Natural Gas Importers (GIIGNL), Society of International Gas Carriers and Terminal Operators (SIGTTO) (or any successor body of the same) and any other internationally recognized agency or organization with whose standards and practices it is customary for international operators of such vessels or terminals to comply, including the holding of a valid operational OCIMF Ship Inspection Reporting system (SIRE) certificate.
- INTRINSICALLY SAFE: means the condition whereby any spark or thermal effect, generated by the normal operation or accidental failure of the equipment, is incapable, under prescribed test conditions, of igniting a prescribed gas mixture. Any equipment so rated will be certified by an appropriate body as "intrinsically safe." Equipment must have the appropriate marking and certification re same.
- LNG: means natural gas which has been converted to a liquid state at or below its boiling point and at a pressure of approximately 1 atmosphere.
- LNG CARRIER or LNGC: means a ship, constructed and equipped for the transportation of LNG in bulk.
- LNG CARRIER CARGO EQUIPMENT: means the LNG Carrier's cargo pumps, Cargo compressors, cargo vaporizers, inert gas generators, motors, control equipment, and other cargo handling equipment and where appropriate also includes the primary and emergency power supply, circulating pumps and other auxiliary equipment essential for safe and efficient operations.
- MARITIME AUTHORITIES: means the Harbour Master of Aliağa Port, and any other maritime related authorities.

- MARITIME SAFETY REGULATIONS: means the regulations, administrative provisions, acts and/or other provisions, including the Harbour Master's orders and instructions, issued by the Maritime Authorities in so far as they are relevant to the operation of the Terminal, FSRU and/or LNG Carriers.

- MASTER: means any person legally and duly certified and appointed as commanding officer responsible for the navigation and management of an LNG Carrier or in his absence his duly authorized deputy.

- NAKED LIGHTS: means open flames, exposed incandescent material or any other unconfined source of ignition.

- PILOT: means the maritime professional licensed by the Maritime Administration, acting in his advisory status to the Master upon berthing and unberthing, and any other maritime safety purposes, as ordered by the Harbour Master, in accordance with the Port Regulations, and Harbour Master's instructions, Maritime Safety Regulations, if any.

- PILOT BOARDING STATION: is the geographical position where pilots embark/disembark LNG Carriers calling at ETKİ LNG Terminal, as defined by the Ports Regulations or the Harbour Master's orders and instructions.

- POAC: means Person in Overall Advisory Command. Normally the FSRU Master who has the most experience of STS operations. May also be a representative appointed by the FSRU Operator. The POAC ensures safe STS operations from mooring to cargo transfer and until departure of the LNGC. The role of POAC does not relieve an LNGC Master of his responsibility (or FSRU Master if POAC is another person) to safeguard his own vessel but provides clear guidelines for the STS operations, including cargo operations.

- SHIP'S AGENT: means the agent appointed by the LNG Carrier owner or charterers to act on behalf of the LNG Carrier in arranging marine services and port formalities, for the LNG Carrier calling at the Terminal.

- TERMINAL: means the ETKİ LNG Terminal as specified in Section 4 (DETAILS OF THE TERMINAL AND BERTH) of this document.

- TERMINAL REGULATIONS: means this Terminal Information and Regulations Booklet as updated from time to time by ETKİ LNG Terminal, which apply to LNG Carriers and Users in connection with the operation of LNG Carriers at the Terminal.

- TERMINAL REPRESENTATIVE: means the designated person (s) who will board the FSRU and LNG Carrier on behalf of the Terminal and will act as coordinator between the FSRU and LNG Carrier. The Terminal Representative or "Berthing Loading Master" is in direct communication with the Terminal control room.

- TUG: means a purpose-built vessel with her special pulling, pushing, escorting and fire-fighting capabilities/capacities, hired by the LNG Carrier and assisting her upon berthing/unberthing, and acting in any other maritime safety purposes, if/when and as instructed by the Harbour Master or if/when requested by the Master.

- USER: means a legal entity entitled to receive services at the Terminal from time to time.

3. LOCATION AND GENERAL INFORMATION

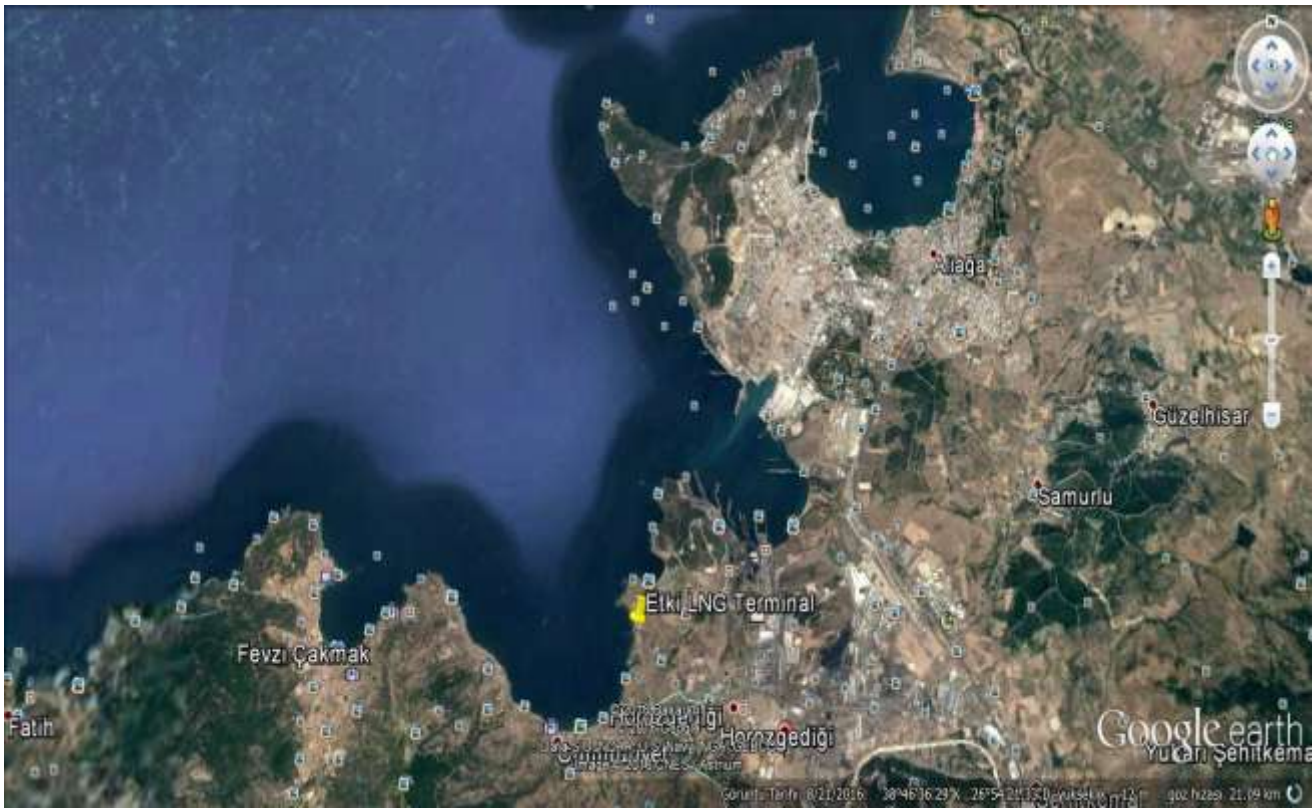

The ETKİ Liman Işletmeleri Doğalgaz İthalat ve Ticaret A.Ş. also known as ETKİ LNG TERMINAL, is a deep-water marine terminal near Aliağa, Turkey, on the coastline of the Aegean Sea.

ETKİ LNG TERMINAL is located in the bay of Horozgediği, adjacent to Çakmaklı village, in the South-western part of Çandarlı Bay, Izmir, Turkey.

4. DETAILS OF THE TERMINAL AND BERTH

The ETKİ LNG Terminal is an unconventional also called hybrid LNG receiving and regasification facility which consists of a steel piled and concrete capped jetty which encompasses berthing and mooring facilities for a 170,000 m3 Floating Storage and Regasification Unit (FSRU) utilized for the import storage and regasification of Liquid Natural Gas (LNG). The terminal jetty fendering and mooring arrangements are designed to moor the FSRU by using the vessel's existing mooring system fitted with conventional mooring wires with tails in accordance with OCIMF guidelines. The design of the berth and the FRSU mooring arrangements permits two (2) vessels to be moored in a double-banked configuration while conducting LNG STS transfer operations with the outboard (seaward) LNGC discharging into the FSRU and the FSRU conducting regasification of LNG and delivering high pressure natural gas into a purpose-built high-pressure gas marine unloading arm.

F S R U

F S R U

4.1. BERTHING LIMITATIONS

ETKİ LNG TERMINAL Berth

Max. Allowable Displacement:	142.995 Tons (Q-Flex)	Minimum Water Depth:	17 m.
Length of Berth:	415 m.	Max Allowable Draft:	14 m.
Max Allowable LOA:	345 m.	Minimum Under Keel Clearance:	3 m.
Salinity:	1.022 - 1.025		

Concrete cap on pilings with fixed fendering 6 mooring dolphins and 3 breasting dolphins Symmetrical to line-up of vapour manifold of FSRU.

Manifold and Mooring Layout:	In accordance with OCIMF ''Recommendation for Manifolds for refrigerated liquified natural gas carriers (LNG) last edition.
Wind speed limitation and action associated:	Please refer to section 13- ENVIRONMENTAL LIMITS of this manual.

5. PORT LAYOUT AND BATHYMETRY

N
W
E
S
BD-1
BD-2
BD-3
YBD-1
YP-1
YBD-2
YBD-3
BD-4
BD-5
BD-6
U7
U8
U6
U5
U4
U3
U2
U1
U0
A
B

6. ENVIRONMENTAL CONDITION

General Information:

The prevailing winds are NNE'ly and SSW'ly. Weather forecasts are closely monitored by the Terminal Operator. As a routine, twice a day weather forecasts are received and made available by the Terminal to the FSRU Master. And, in particular, Adverse Weather Forecasts, when received, are reported to the FSRU Master as described with "Adverse Weather Forecasts Reporting Procedures", which is shared also with the LNGC Masters. Such weather forecast is by their nature only indicative of conditions that may be experienced. Neither FSRU nor the Terminal Operator accepts any liability or responsibility whatsoever for the accuracy or otherwise of any weather forecast made available by the Terminal Operator.

7. LNG CARRIER DOMESTIC MATTERS

The domestic needs of the LNG Carrier are to be arranged by the Ship's Agent. The Terminal Operator, if requested and at their sole discretion, assist in these arrangements. Ship's Agent to take into account that only the support/service vessels registered/permitted by the Harbour Master are allowed to enter Terminal sea area.

Provisions, stores deliveries and crew changes	Terminal permits to accommodate provisions, spares and/or stores deliveries at the Terminal. The LNG Carrier may carry out stores, provisions, spares deliveries or effect crew changes from support/service vessels when alongside. In any case such operations or services may be performed only with the prior permission of the Terminal Director and FSRU POAC and only to the extent that any operations related to cargo transfer and safety of the STS operations are not adversely affected. All access to the LNGC apart from STS related operational personnel shall be done from the sea side. The LNGC crane located on the port side shall be used for provisions, spares and/or stores deliveries and LNGC shall ensure that simultaneous crane operation does not take place at any time during the STS. The FSRU crane located at the Port manifold may only be utilized for cargo related activities.
Repairs	While the LNG Carrier is alongside the Terminal, repairs are prohibited, unless otherwise agreed by the Maritime Authorities, the FSRU POAC and the Terminal Operator to facilitate safe or continued operations.
Medical care emergency	While there are no medical facilities available on the Terminal, medical evacuation to shore may be organized by the Ship's Agent at the expense of the LNG Carrier. The Ship's Agent makes requests to the Terminal Operator for medical evacuation. The Ship's Agent is responsible for logistical arrangements for the evacuees upon arrival on shore.

Bunkers and potable water	There are no bunkering or potable water facilities at the Terminal. Bunkering activities are not permitted at the Terminal or within the Port Limit.
Garbage Facilities	There are no garbage reception facilities at the Terminal.

8. COMMUNICATION INFORMATION

All communications between the Terminal and LNG Carrier and Ship's Agents shall be conducted in the English language.

Item	Description
VHF "Operating Channels"	Channel 16 and 74
VTS "Sector Aliağa"	Channel 69
Terminal Details	
Terminal email	marineoperations@etkiliman.com.tr
Terminal Telephone CCR	+90 232 610 20 00
PFSO Mobile	+90 543 449 45 12
ETKİ LNG Terminal Fax	+90 232 610 20 00
FSRU TURQUOISE P email	master.turquoisep@fleet.pronav.com
FSRU TURQUOISE P telephone	+90 532 065 4274
Pardus Energy Operations	operations@pardusenergy.ie osmankolay@pardusenergy.ie

8.1. PRE- ARRIVAL COMMUNICATIONS

After departure from the loading port, the LNG Carrier's Master must send, a series of communications and estimated times of arrival (ETAs) to Master of FSRU TURQUOISE P, Pardus Energy and ETKİ LNG Terminal as listed below:

Upon departure from loading port a "Departure Notice" shall be sent to terminal with below information:

- Name of the LNG Carrier.
- The quantity (in cubic meter) and quality of LNG loaded and the portion of such quantity to be unloaded at the terminal.
- The LNGC must send the details of the cargo it intends to discharge to the FSRU, its quality, chemical analysis and all information related to any variants to cargo parcels onboard. Should the LNGC mix or propose to mix LNG prior to or during cargo transfer with the FSRU, or the cargo has aged significantly, full details must be shared with the FSRU and the terminal no later than 96 hours prior to arrival. Where possible the LNGC shall send the cargo loading documents, Bills of Lading and certificates of Quality/Quantity to the FSRU and the terminal on departure from its load port, or as soon as possible thereafter. Heel retention volumes to be declared at the same time where possible.
- All subsequent ETA notices should include cargo condition i.e. cargo temperature and cargo tank pressure relevant to specific ETA notice. The amount of heel to be kept on board LNGC after completing discharging as well as an estimation of quantity to be unloaded to be stated as well.

- The ETA and any operational deficiencies in the LNGC that may affect its performance at the Terminal or berth.
- ETA Notice of the LNG Carrier shall be submitted, updated or confirmed (as the case may be) at the following intervals, subject to the Maritime Safety Regulations:
  (i) ninety-six (96) hours before arrival at Pilot Boarding Station ("PBS"),
  (ii) seventy-two (72) hours before ETA at the PBS,
  (iii) forty-eight (48) hours before ETA at the PBS,
  (iv) twenty-four (24) hours before ETA at the PBS,
  (v) twelve (12) hours before ETA at the PBS; and
  (vi) thereafter for any ETA change of more than one (1) hour from initial and subsequent ETA at the PBS.
  (vii) If the cargo to be unloaded has been acquired by or diverted to the Terminal, after the departure of the LNG Carrier from the load port or after the relevant time specified above, then the ETA Notice shall be submitted as soon as possible after such acquisition or diversion, but in any event taking into account any applicable requirement for the final time by which the arrival of LNG Carrier shall be notified to the Maritime Authorities.
  (viii) Subject to any applicable restrictions, including any night-time berthing restrictions imposed by Harbour Master, or any other public authorities or pilots or any other reasonable timing restrictions imposed by Terminal, the LNG Carrier Master or its agent shall give its Notice of Readiness ("NOR") upon arrival of such LNGC at the PBS (Pilot Boarding Station) and when that LNGC is ready to berth and to unload LNG in all respects.

When in VHF range of the Terminal the LNG Carrier shall contact with the FSRU and maintain a listening watch on the FSRU VHF designated operating Channel, VHF Channel 16 and then switch to a working channel. Pre-arrival information is to be, in any case, transmitted to the Terminal and FSRU no less than 72 hours prior to arrival at the Terminal.

The following minimum checks and tests must be carried out successfully on board the LNG Carrier and duly recorded within 72 hours prior to the estimated time of berthing:

- Water Spray systems
- Fire pumps
- Inert condition of annular space, primary and secondary space if applicable
- Operation of cargo system remote control valves and their position indicators
- Alarm function of fixed gas detection equipment
- Primary custody transfer and alarm set points
- Operation of the ESD system
- Confirm operational readiness of all cargo equipment and ancillaries.

The LNG Carrier's Master shall immediately report any defects or deficiencies concerning these checks and tests to the Terminal and to the Master of the FSRU.

The LNG Carrier's Master shall present evidence of the successful completion of the above checks to the FSRU Master at the pre-transfer meeting.

ALL DELAYS / CHARGES caused by the ship's failure to observe ETKİLNG TERMINAL Regulations and general legislation affecting the terminal, FSRU or LNGC shall be for the ship's account.

9. PILOTAGE & TUG BOATS

In general, the capability, size and number of the ship assist tugs required to serve the vessels calling at the ETKİ LNG TERMINAL has been defined by technical studies conducted by Dokuz Eylül Üniversitesi - Maritime Faculty, on behalf of ETKİ LNG TERMINAL consistent with best industry practice for LNGCs expecting to call at the ETKİ LNG TERMINAL facility. The technical studies included the following basis of assumptions:

- LNGC sizes to 217,000 m^3 making periodic LNG delivery to the ETKİ LNG TERMINAL facility (FSRU)
- Existing Marine Pilot practices at ETKİ LNG TERMINAL
- Port facility and ship safety concerns
- Emergency response

For each vessel calling at ETKİ LNG TERMINAL, the Maritime Administration or the Harbour Master establishes the minimum level of vessel services, including the number of Pilots, ship assist tugs (size and capability), along with the deployment of escort and security vessels, mooring line handling vessels and standby tugs in the Port Regulations, and Harbour Master's Orders and Instructions. Ship owners and operators may always request additional services, based upon their respective Safety Management System requirements. Specific arrangements should be made through their ship agents.

Pilotage is compulsory for LNG vessels for berthing and unberthing. VHF Contact should be established with the Pilot station on Channel 74 when within range. Two pilots will board the vessel at the Pilot Boarding Station, as designated by the Port Regulations or Harbour Master's Orders and Instructions. Pilot boarding arrangements (pilot ladders/combination ladders, etc.) shall comply with SOLAS Chapter V Reg. 17 and other relevant IMO requirements. Pilotage and Tugs services are provided by third parties in line with local regulations.

Stand-by pilot shall be on board the LNG/C during STS operation as per Harbour Master's instruction. In addition to stand-by pilot, two stand-by tugs having a bollard pull of 1x60 and 1x40 tonnes will be available at Terminal during STS. Stand-by Pilot and Tugs will listen VHF Channel 74 during STS operation unless otherwise agreed between Terminal and Stand-by Pilot.

As per the Harbour Master's instructions according to technical studies for ETKİ LNG TERMINAL, for conventional LNGCs, four (4) tugs shall be utilized with an aggregate total bollard pull of at least 160 tonnes and for Q-flex LNGCs, four (4) tugs shall be utilized with an aggregate total bollard pull of at least 212 tonnes.

The ships' agency is responsible for booking and coordination of the Pilots, Tugs and any other services to the LNG Carriers.

10. BERTHING & UNBERTHING OPERATIONS & CRITERIAS

Berthing schedule shall be determined by the Terminal Operators in accordance with its procedures and obligations to its users, subject to the FSRU available storage capacity and any contrary requirements of the ETKİ LNG Terminal Authorities.

Berthing is prohibited at night-time.

Unberthing is allowed by Harbour Master after sunset and subject to below conditions:

- If there is a request from the authorized pilotage organization, in which case additional tugs shall be provided,
- Departure maneuvering shall be done under weather conditions which the authorized pilotage organization approves.

Within the designated agreed wind limits for safe maneuvering, i.e. if forecasted wind requires disconnection and departure, the LNGC or FSRU shall depart before the weather deteriorates beyond the capabilities of the tugs.

11. BERTHING APPROACH

All Maneuvering of LNG Carriers proceeding to and within Port Limits shall be conducted within appropriate care and caution at the speed and in a manner.

At appropriate position within port limit the Tugs must be connected to the forward and aft ends of the LNG Carriers.

Final transverse approach / berthing speed of the LNGC should not be more than 0.12 m/sec and adjusted depending on weather conditions.

Berthing approach speed is followed by pilots via approved suitable equipment.

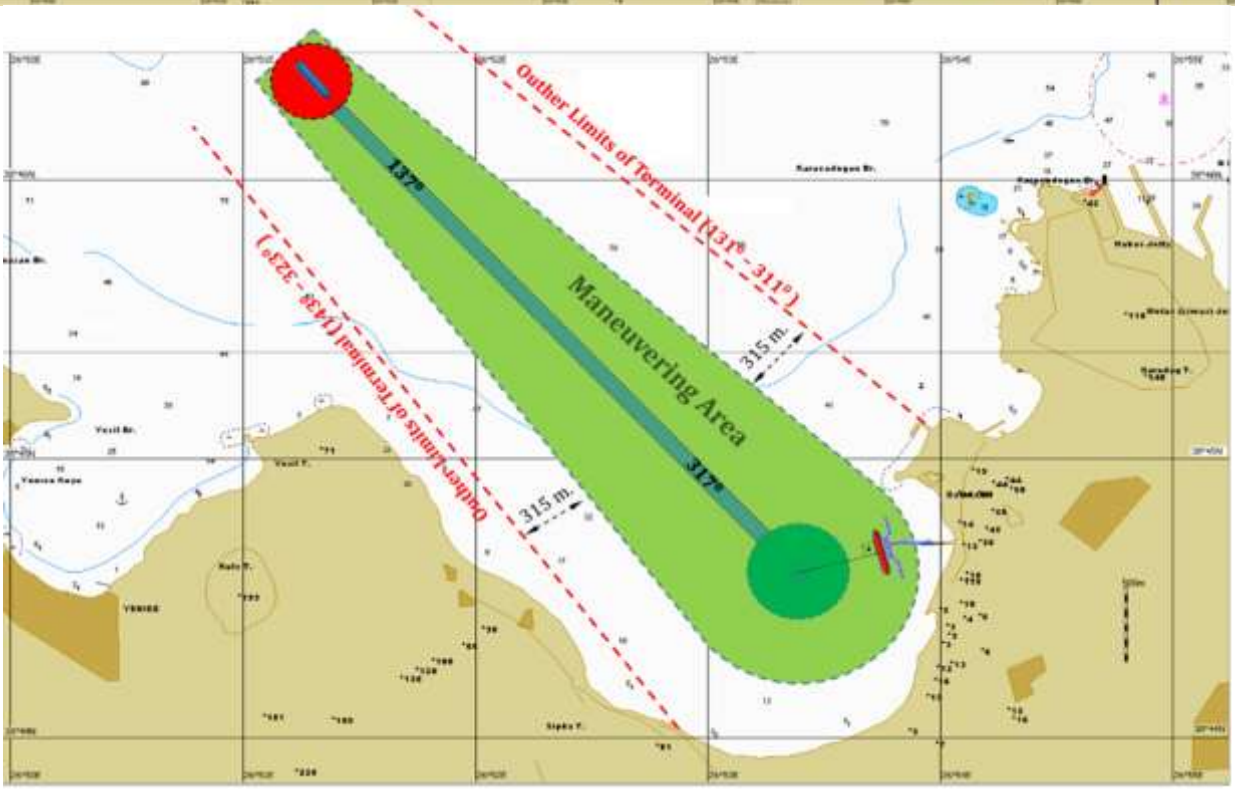
Outher Limits of Terminal (131° - 311°)
Outher Limits of Terminal (143° - 323°)
137°
317°
Maneuvering Area
315 m.
315 m.

12. MOORING AND MOORING ARRANGEMENT

12.1 MOORING

The layout for the mooring arrangement of ETKİ LNG Terminal Berths were developed to suit a wide range of LNG Carriers designs. All mooring and breasting dolphins as well as mooring point on FSRU are equipped with quick release mooring hooks which are fitted with load sensors and are monitored with a Tension Monitoring system located in the main terminal control room, FSRU cargo control room and also can be monitored locally. Additional monitoring of the LNGC mooring loads are observed on the FSRU.

The LNG vessels range up to Q-Flex size shall be moored, unless a different mooring arrangement is submitted to and approved by the FSRU Operator and Terminal Management in advance. It shall be noted that a ship specific SSCS (Ship to Ship Compatibility Study) shall be performed and / or verified by the FSRU Operator for each vessel visiting the FSRU and Terminal.

The following best practices / guidelines, based upon OCIMF and SIGTTO guidelines, shall be followed for the duration of all vessel calls at the ETKİ LNG TERMINAL & FSRU facility:

- The Master is responsible for ensuring that mooring lines are in good condition and that winches and securing devices are properly maintained in safe & efficient operational order. Mooring shall be completed as per recommendations of the STS compatibility study in compliance with the technical studies upon which the ETKİ LNG TERMINAL berth was designed.
- Under no circumstances should a mixture of wires and synthetic lines (mixed moorings) in the same direction of service and to the same mooring point be acceptable.
- Spring lines on LNGC shall be prepared before arrival in a way to pass only rope tail to FSRU. Spring lines should be stretched out from fwd & aft spring line fairleads, all the way to manifold area, and kept attached to LNGC starboard side upper deck railings by securing ropes.
  The LNGC must take care when running mooring lines and ensure that moorings do not foul or get stuck on the fenders. Efficient communication between the mooring station officer and winch operators must ensure that no excess slack when running and making fast moorings.
- When mooring, the LNGC shall be prepared to send mooring lines to the ETKİ LNG TERMINAL jetty and the FSRU. Mooring boats shall be used to run the head and stern lines of the LNGC to the shore mooring dolphins (BD-1 and BD-6) quick release hooks (QRH).
- The maximum permitted angle between the LNGC side and the fender-line for landing the LNGC on the fenders is ten (10) degrees
- The Master should endeavor to ensure compliance with the mooring layout. Each mooring tail shall be fitted by with a minimum of a 24mm messenger pennant and a length of 1 m. in length with spliced eye and fitted to the mooring tail soft eye so as not to interfere with attachment to the mooring hook. This pennant shall be used to attach the FSRU mooring messenger using a bowline knot for all mooring operations.
- Once moored and All Fast, the vessel's winches must be secured with the winch brakes set to the design holding capacity of the mooring winch system. Automatic tension winch settings shall not be used.
- During the period alongside, a strict watch shall be maintained of the vessel's mooring at all states of tide to ensure that all lines are properly tensioned to prevent undue movement of the vessel. The vessel must provide full power to all mooring winches throughout the period alongside the FSRU & ETKİ LNG TERMINAL facility.
- All mooring lines shall only be adjusted under the supervision of a responsible ship's officer.
- In order to avoid damage to fenders, cargo transfer hoses and the HP gas arm, the vessels shall be kept close alongside at all times.

<u>Any known defect in the vessel's mooring system including limitation of mooring winch brakes should be reported to the TERMINAL DIRECTOR and FSRU Master by the LNGC Master in order that, if necessary, additional precautions may be agreed upon. Any additional measures, if required for mitigating defects should be agreed upon between the Master of the LNGC, the Master of the FSRU and the TERMINAL DIRECTOR.</u>

LNG carriers will be berthed to FSRU by starboard side alongside

The FSRU and LNGC will maintain a representative at the vapour line manifold to agree to the Ship being in position. The mooring plan shall be based on a study that takes into account OCIMF guidelines and shall be agreed to between the FSRU and the LNGC's Master. If the LNGC cannot comply with the Mooring Plan, the FSRU & Terminal must be notified immediately, the FSRU and Terminal takes no liability in terms of material

damage or delay for any deviation. Any damages sustained by the FSRU or the Terminal as a result of mooring changes shall be the responsibility of the shipper.

12.2 MOORING ARRANGEMENT

The ETKİ LNG TERMINAL is fitted with mooring and breasting dolphins on the jetty on which the quick release hooks (QRH) are fitted. Each QRH has a mooring load cell incorporated within it which allows for remote monitoring of mooring line loads. The actuation of the QRH function is also controlled locally and from the FSRU. QRH actuation is on a hook-by-hook basis in order to avoid unintentional release of all lines.

The general arrangement of the mooring system is as follows:

Mooring Dolphin BD-1: QRH No.1 3x150 ton of SWL QRH No.2 3x150 ton of SWL	Breasting Dolphin YBD-3: QRH No.7 3x150 ton of SWL
Mooring Dolphin BD-2: QRH No.3 3x150 ton of SWL	Mooring Dolphin BD-4: QRH No.8 3x150 ton of SWL
Mooring Dolphin BD-3: QRH No.4 3x150 ton of SWL	Mooring Dolphin BD-5: QRH No.9 3x150 ton of SWL
Breasting Dolphin YBD-1: QRH No.5 3x150 ton of SWL	Mooring Dolphin BD-6: QRH No.10 3x150 ton of SWL QRH No.11 3x150 ton of SWL
Breasting Dolphin YBD-2: QRH No.6 3x150 ton of SWL	

FSRU TURQUOISE P MOORING LAYOUT:

FSRU Turquoise P moored Starboard side alongside at ETKI LNG Terminal: Nine lines forward and Nine lines aft were used and arranged in 3 / 4 / 2 forward and 4 / 3 / 2 aft configurations, as shown below:

The distance from vapour center line to shore target is 30.1m.

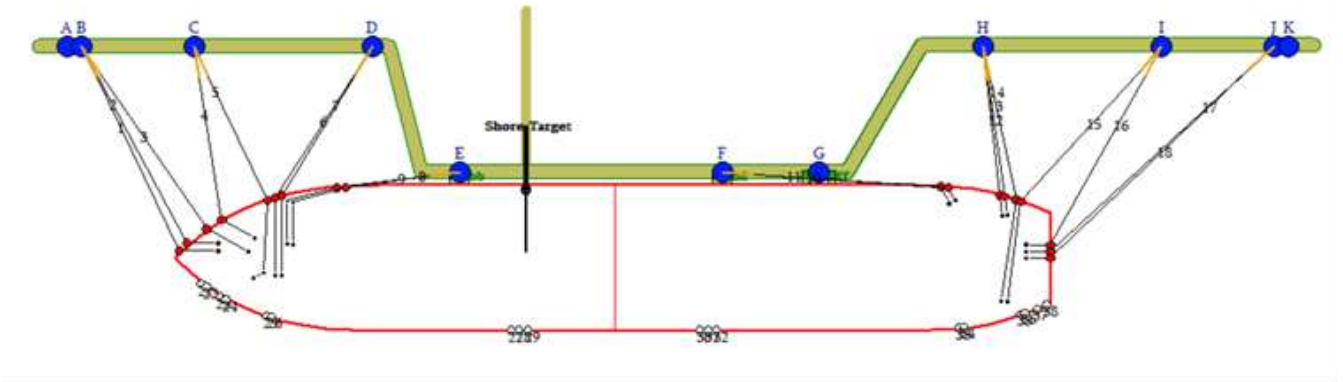

13. ENVIRONMENTAL LIMITS

The Following Tables show the prescribed environmental limits for certain operations.

Adverse Weather Procedures for Conventional and QFLEX Type LNG Carriers	Wind Speed (Knot)		Wave	Pilot
	290⁰-345⁰ WNW-NW-NNW	345⁰-290⁰ N-E-S-W	H_s (meter)	
Max wind for berthing	18	21	<1.5	Ready
Stop Cargo Operation	21	30	≃1.5	Inform
Hose Disconnection	24	35	>1.5	Boarding
Un-berthing	27	40	>1.5	On Board

This information is provided within the prescribed environmental limits, these operations are always subject to collective decision of the LNG Carrier's Master, FSRU Master (POAC), the Pilots and Maritime Authorities. Limits are based on agreed criteria with the Maritime Authorities and based on sustained average wind of a minimum 15 minutes duration for all vessels measured locally at the berth, except for Q-Flex, which are based on 6 minutes sustained wind speed duration. Actual rope tension shall be checked by FSRU in accordance with OCIMF criteria and below winch brake setting at 60% MBL (Minimum Breaking Load) and shall be used as an additional indicator to ensure operations stay within acceptable limits.

Should / if wind and/or wave forecasts exceed above limits during expected laytime window of an LNGC then collective decision of the LNG Carrier's Master, FSRU Master (POAC), the Pilots and Maritime Authorities shall be considered and made on possible berthing postponement of LNGC.

Synthetic tails of a suitable length and minimum-breaking load consistent with OCIMF guidelines shall be used on all moorings.

The LNGC Master is responsible to ensure that the LNGC is securely moored with due regard to the prevailing weather and the most recent forecast. LNGC's fitted with self-tension mooring winches must have these on manual control when at the FSRU. LNGC's anchors must be cleared and ready for use while alongside the FSRU. Mooring lines used to the same mooring dolphin or mooring hook set shall be in good condition and of a similar breaking strength and material. Mixed Moorings are not allowed. Certificates for mooring line and winches shall be made available to the FSRU and Terminal upon request.

14. SHIP TO SHIP (STS) OPERATIONS

All STS operations should be done according to PARDUS ENERGY / PRONAV LNG Ship to Ship Information Manual, compliance with obligations and responsibilities within the FSRU&LNGC Information Exchange pack.

15. PRE-TRANSFER OPERATIONS

15.1 Tests and Inspection Prior to LNGC Arrival

The visiting LNGC ship shall perform the normal pre-arrival tests, inspections and preparations as for typical shore terminals, as follows:

- Low cargo tank pressure;
- Liquid manifolds shall be cooled down and drained before arrival;
- Manifold shall be cleaned, purged and ready for opening (singled-up to 4 bolts)
- Air & N2 hoses and connections ready.
- Fire hose (to fill saddle with water) laid out;
- SW Ballast system tested;
- Gas meters tested;
- Cargo alarms set points checked and annunciator tested;
- ESD system tested;
- Portable deluge system and water bath dams installed below manifolds and
- Pre-Arrival tests, inspection checklists completed.
- LNGC manifold davits should be available for use by the FSRU hose connection party.
- Nonslip embarkation area for crew accessing and egressing the personnel transfer basket.

Each LNG Carriers that the user intends to moor alongside and unloaded to the FSRU at Port area shall be in compliance with International standards, to be approved by the FSRU and Terminal Operator having successfully passed a Compatibility Study Process and detailed hereinafter and have passed all inspections. (Approval & Vetting Procedures and Scheduling procedures for incoming Cargo to FSRU.)

- SCHEDULING PROCEDURE FOR INCOMING CARGO TO THE FSRU
- VETTING CRITERIA AND OPERATING STANDARDS FOR LNG VESSELS
- LNG SHIP ACCESS TO PARDUS ENERGY LNG FSRU SIDE BY SIDE OPERATION

15.2 STS Fenders

The FSRU shall have four (4) Yokohama fenders rigged on the port side. Two (2) of the fenders are rigged aft of the LNG cargo manifold and the remaining two (2) forward. There are also two (2) ‘baby’ fenders suspended on the upper fore and aft limits of the parallel mid-body. The fenders and rigging are subject to inspection prior to each STS transfer operation. Rigging arrangements may vary according to FSRU / LNGC requirements.

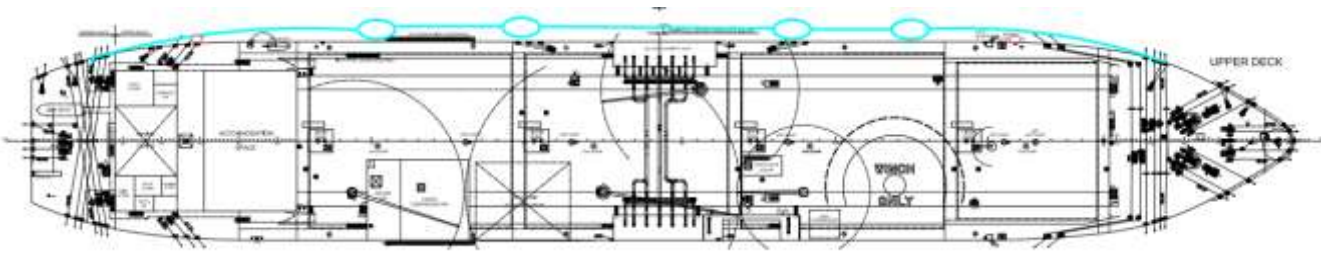

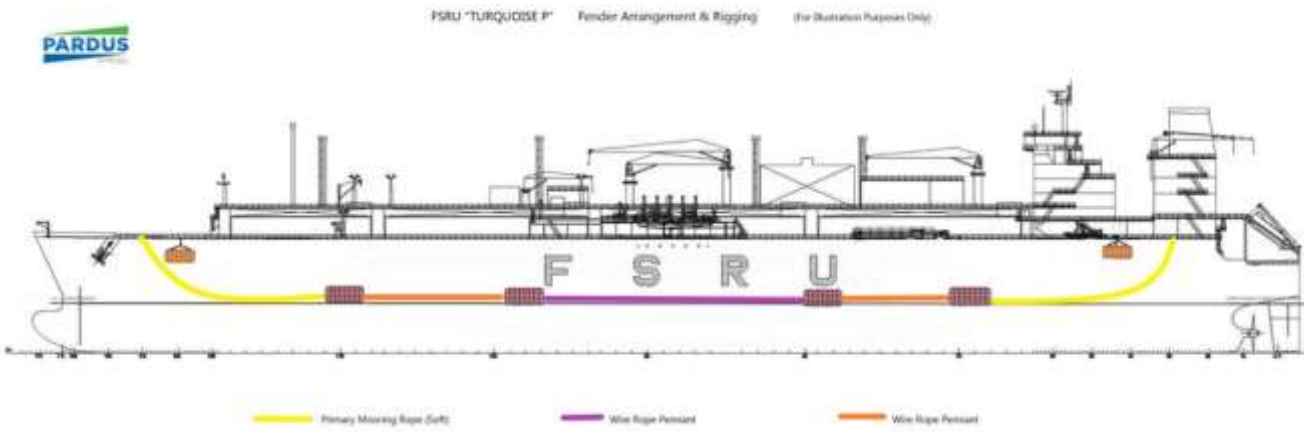

The FSRU's Yokohama fenders are inspected on a regular basis as part of the PMS of the FSRU. In addition, the FSRU shall visually inspect fender, associated moorings and tyre net, prior to and after each and every STS operation. Each primary fender's individual safety valve is tested on a bi-annual basis.

15.3 Pre-Cargo Transfer Meeting

After the LNGC/FSRU Safety Checklist & Cargo Handling Agreement have been completed and prior to the opening Custody Transfer Measurement Survey a 'Pre-Cargo Transfer Meeting' shall be held on board the FSRU.

The attendees of this meeting shall be the LNGC officer responsible for cargo management and the FSRU's responsible officer for cargo transfer, ETKİ LNG TERMINAL 's representative and any other individual with a recognized and legitimate interest in the cargo transfer operation.

The purpose of this meeting is to ensure that all aspects of the cargo transfer and associated activities are clearly understood and documented, using the FSRU's "Activity Schedule". The agenda for this meeting shall include as a minimum for normal cargo transfer, but not necessarily be limited to the following:

- Status of cargo tanks on arrival (temperature and pressure)
- Sequence of ESD tests
- Cargo hoses Cool-down procedure
- Vapour handling
- Ramp up
- Bulk cargo transfer procedure
- Ramp down
- Drain purging and disconnecting
- Ballasting
- Anticipated weather and sea conditions.
- Communications between FSRU, LNGC & (stand-by tug if any).
- Emergency Procedures
- Maritime Security
- Supplementary activities, e.g. crew exchange, storing and other activities which may impact operational focus and resources.

The FSRU shall also provide the LNGC with an Information Exchange Pack, which each LNGC will receive, acknowledge and complete, returning signed copies to the FSRU and terminal prior departure.

15.4 "Notice of Readiness"

The LNGC shall tender a "Notice of Readiness" when the LNGC arrives at the Pilot Boarding Station and is ready to berth to unload LNG in all respects. The "Notice of Readiness" shall be addressed to the Master of the FSRU and ETKİ LNG Terminal only and copied to other entities as may be required.

Laytime used in unloading an LNGC ("Used Laytime") shall begin to count upon tendering the "Notice of Readiness" and shall end when the LNG Carrier returns to the Pilot Boarding Station after unloading.

Taking into account the designed STS cargo transfer rate of the FSRU, "Allowed Laytime" shall be forty-two (42) consecutive hours for LNG Carriers carrying an LNG cargo up to 140.000 cubic meters.

For every additional five thousand cubic meters (5.000 m^3) between 140.000 cubic meters and 170.000 cubic meters, one (1) hour shall be added to Allowed Laytime.

Notwithstanding the above stated, if the LNGC arrives with a saturation pressure of more than 140 mbar(g) in its tanks, Allowed Laytime shall be extended for additional three (3) hours.

The Master of the FSRU, ETKİ LNG Terminal and the Master of the LNGC shall take necessary actions for not allowing "Used Laytime" exceed the "Allowed Laytime".

Any time lost as a result of any of the following shall be added to Allowed Laytime:

a. reasons attributable to the fault of the LNGC or its master, crew, owner or operator;
b. Force Majeure;
c. Adverse Weather Conditions;
d. waiting time for daylight requirements as per the instructions of the Harbour Master;
e. time spent for the stripping operations if required by the Master of LNGC (subject to commercial agreement in advance of berthing); and
f. time during which normal operation at the FSRU and ETKİ Terminal is prohibited by law, regulation or decree.

15.5 Bills of Lading

The Bill(s) of Lading for the cargo to be discharged shall be handled by the owners of the LNGC and their local agents. The Master of the LNGC, owners / operators and charterers, if any, shall take utmost care to have the requisite authorization for the Master of the LNGC to commence discharge operation without any delays.

The Master of the FSRU shall not, in the normal course of business, be required to issue a Bill of Lading or Mate's Receipt for cargo laden by STS transfer.

15.6 Cargo Survey, Documentation, Customs and Agents

Visiting LNGC's appointed agent will arrange port entry and customs clearance after berthing. Clearance by authorities must be given prior to any operations can commence. Custom officials and other representatives are disembarking the LNGC via launch at berth.

15.7 Emergency Shut Down Systems

Each vessel involved in the STS transfer operation shall have an emergency shutdown (ESD) system which enables a rapid and controlled means of stopping the cargo transfer and isolating the free communication of LNG and FSRU between the vessels in the event of an emergency. Modified arrangements may be required for vessels engaged in a STS cargo transfer in order that both ESD systems are compatible. This shall be addressed in the Compatibility Study. The ESD system shall comply with the SIGTTO guidelines for linked ESD systems.

The ESD system features the typically 'stepped' system used at conventional LNG terminals where ESD-1 shutdowns the cargo transfer system in a 'fail-safe closed' arrangement and ESD-2 releases the cargo transfer hoses in the event of vessel separation.

15.8 Linked ESD Systems

The cause and effect of shutting down cargo transfer in an emergency shall be discussed and confirmed by both vessels prior to commencement of the cargo transfer. Vapour management and the actions surrounding recovery from an ESD shall also be confirmed.

The primary ESD link shall consist of a pneumatic, electric or fiber optic connection to be with a "weak link" fitted in the umbilical between the two vessels. The weak link is a failsafe in case of vessels drifting apart. The means of linking the ESD systems of the vessels shall be addressed in the Compatibility Study.

15.9 Testing of ESD Systems

Prior to arrival, the ESD system shall be thoroughly tested by both vessels as required by the IGC code. All methods of activation should be tested and the timing of the ESD valve closure shall be noted. The closing times and sequencing of the ESD valves shall be more than 15 and less than 30 seconds ensuring pressure surges do not occur. The FSRU ESD valves are timed to close within 30 seconds. The LNGC should set its valves to close within 25 seconds.

Prior to commencement of the cargo transfer (hose cool down), the linked ESD system shall be tested by both vessels in accordance with the IGC code. The ESD shall be tested once cargo transfer hoses are connected and purged. It is important that the ESD valves are not operated before purging has been completed since the cargo transfer hose and spool pieces may contain oxygen and moisture.

The procedure for testing the linked ESD system shall be addressed in the Compatibility Study and confirmed at the pre-transfer safety meeting. The vessels shall agree to the sequence and number of tests to be conducted.

15.10 Communications Failure

In the event of a Communications failure between the vessels, all cargo transfer operations shall shutdown until the cause has been identified and Communications between the vessels re-established

15.11 Mooring Integrity & Safety Checks

Prior to connecting the cryogenic flexible hoses/or commencement of the Pre-Cargo Transfer Safety Meeting the FSRU Master or his authorized deputy shall together with a responsible LNGC officer check and confirm that all moorings are tight, brakes properly hardened up and winches are out of gear, Firefighting equipment is deployed, offshore manifolds are fully blanked and tight and other areas of general safety.

Fire Wires must be rigged and maintained by visiting LNGC's. Fire wires should be positioned on the offshore bow and quarter. Fire wires shall be secured to bollards with a minimum of five turns and led directly to a shipside chock with no slack on deck. The outboard end shall have a messenger attached at the eye and be led back to the Ship and secured to maintain the eye and wire two (2) meters above the water.

If the LNGC has sunken bitts that comply with ISGOTT recommendations the fire wire need not be deployed.

On completion of confirming mooring integrity and safety, and following the conclusion of the safety meeting connection of unloading arms may proceed.

The Master of the FSRU and LNGC shall ensure the vessels are moored properly according to the approved mooring layout. Any deviations in the mooring arrangement shall be brought to the attention of the TERMINAL DIRECTOR.

15.12 Water Spray Hull Protection System

Once the LNGC is moored to the FSRU, and before the cargo transfer hoses are connected, the water curtain should be started on both vessels.

After completion of connecting the cargo transfer hoses, each vessel is responsible to establish a water bath and water cascade on the trunk deck slope under the cargo manifold.

The fire main shall remain pressurized at all times on both the FSRU and the LNGC.

15.13 Communications Alongside

Communications between LNGC and FSRU shall be established before commencement of cargo transfer operations.

Communications systems shall be included in the ship compatibility study and shall be confirmed during the pre- transfer safety meeting.

The FSRU shall provide the communication links between the vessels.

In addition, the FSRU shall provide the LNGC with a hand-held UHF Radio, spare battery and charger for use during the unloading operation. A receipt for the radio shall be signed by a responsible officer from the LNGC.

15.14 Gas Burning

Gas burning on board of the LNGC can be accepted related to commercial terms and condition outline in the commercial agreements between the cargo owner and the vessel operator. Such agreements shall be made prior to cargo operations commencing.

LNGC's equipped with reliquefication plant may use it as per their requirement but only after the approval of the ETKİ LNG TERMINAL DIRECTOR or his representative.

Operation of any visiting LNGC's GCU (except for emergency situations) must be cleared with the FSRU and shall be agreed with the cargo owner in advance. Meter readings must be recorded before GCU or any gas burning equipment (incl Steam Dumping on older vessels)

15.15 Opening Custody Transfer Measurement

Before the LNGC's manifold valves are opened at the start of line cooldown the opening CTMS shall take place. The opening CTMS shall take place on both vessels simultaneously, therefore clocks on each vessel should be synchronized accordingly. This is usually done following the safety meeting.

The CTMS on the LNGC shall be witnessed by an independent surveyor. The CTMS is conducted in compliance to the standard GIIGNL guidelines.

Engine room fuel meters, GCU counter and other 'consumers' shall be recorded at the start of opening CTMS. In the event of a primary gauging system failure, the secondary gauging system shall be used for CTMS. Vessels should NOT secure gas burning prior to or during gauging unless otherwise agreed.

15.16 Cargo Transfer Hose Specification and Testing

Flexible cryogenic cargo transfer hoses are stowed on board the FSRU and provided to the LNGC for cargo transfer. When not in use, the hoses will be stowed in way of the FSRU manifold as per manufacturers guidelines and shall be maintained under a slight positive pressure of N2 and protected from the elements as appropriate.

The FSRU is additionally fitted with a hose rack that allows for:

- Storage of hose in horizontal position;
- Visual inspection and dew pointing of hoses at regular intervals;
- Pressure testing of hoses per Class and OEM requirements; and
- Ease of hose handling for the crew with the manifold crane.

The cargo hoses are a nominal 10" (250 mm) diameter by 20 m. length, composite hose, type approved for the transfer of LNG.

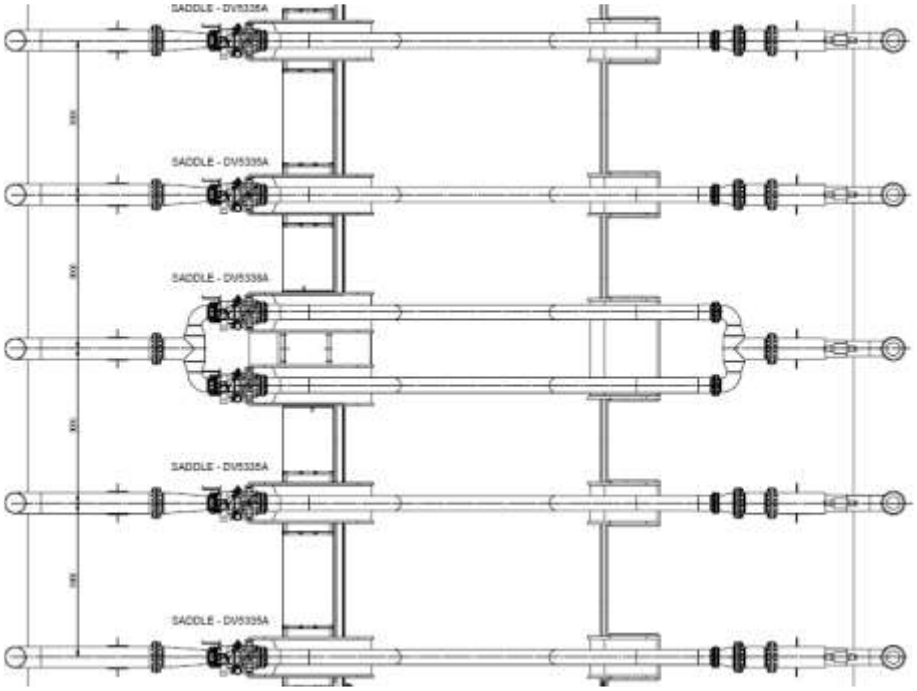

The hoses are the similar to what is outfitted as part of the vessels' safety equipment for emergency cargo transfers. Each hose is Class approved and shall be operated in service as long as tested annually with a satisfactory result according to manufacturer's instructions.

Hoses must not be lifted or transferred when filled with LNG. (except in emergency)

Cargo Hose Specification:

Type:	Composite Multi-Layer
Diameter:	10"/250 mm nominal internal - 12"/295 mm outer.
Bending Radius:	1500 mm and supported
Material:	Polyester and Polyamide films and fabrics, 316L stainless steel components
Length:	20m
Temperature Range:	-196 ^{O}C to +50 ^{O}C
Operation Pressure:	10.0 bar Max
Test Pressure:	20 bar
Flow Rate:	2,250 m^3/hr per hose for LNG
Connection:	10" 150 ASA Floating Flanges
Weight:	580 kg (empty)
Test & Certification:	Hose Assemblies produced and tested according to EN 13766 & EN 1474-2. Each Hose tested and Inspected according to BV Class requirements and according to EN 10204 3.1

An annual pressure test of each hose shall be conducted and results recorded by the FSRU. Due to the construction of the hose it is not possible to stencil the test date to each hose. The annual pressure test shall be performed in accordance with the IMO IGC 5.7.3 or as per the manufacturer's recommendations.

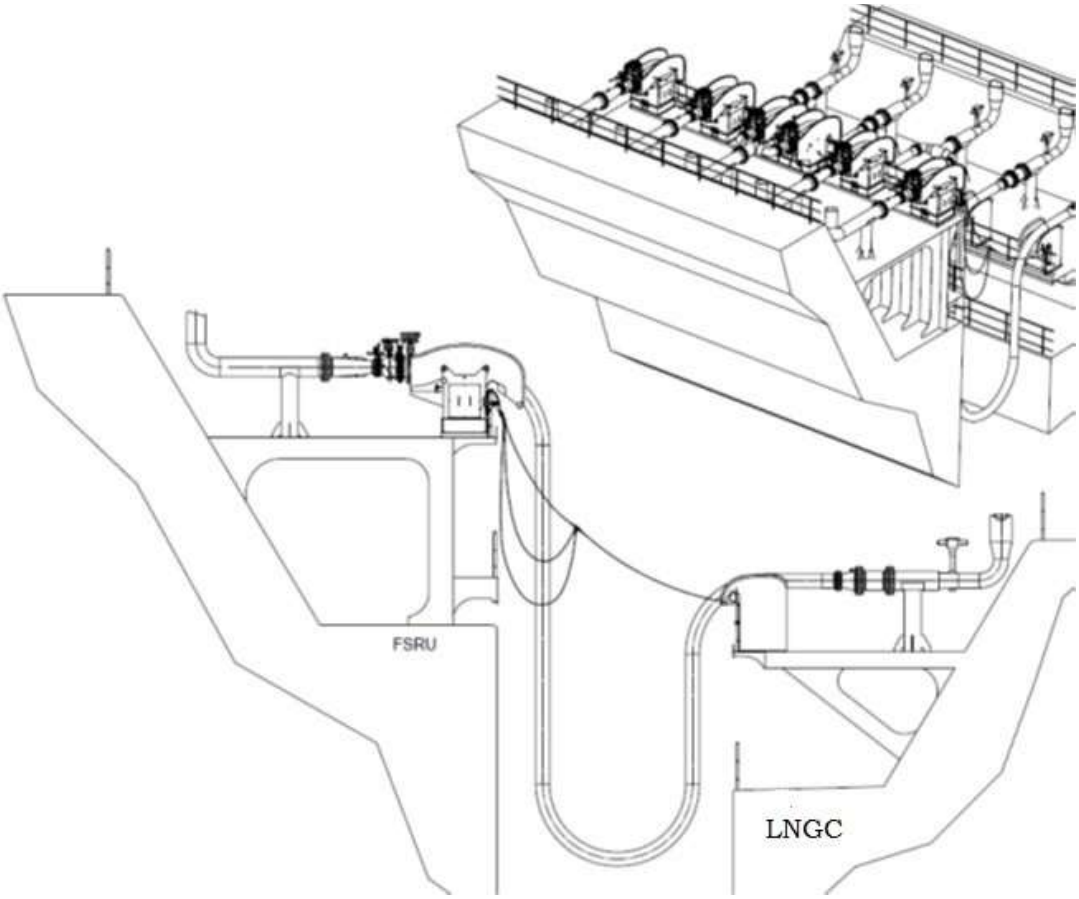

When the cargo transfer hoses are stowed on the FSRU when not in use, the hoses shall be stowed and maintained under a slight positive-pressure nitrogen and ambient temperature.

Purging prior to transfer

Following connection of the hoses and prior to transfer operations proceeding the hoses should be purged through with Nitrogen, with a dew point of <-40 ˚C, until the atmosphere within the hoses contains <5% O_2. The hoses should remain under positive pressure (5kPa) following depressurisation. The FSRU and LNGC shall ensure that sufficient Nitrogen is readily available at each vessels manifold.

Liquid draining post transfer

The detailed liquid draining process will be dependent upon the transfer system and manifold configuration. The following guidance should be observed in developing the procedure:

- Wherever possible gaseous dry N_2 (<-40 ^{O}C dewpoint) should be introduced to the hoses at the start of the draining procedure. N_2 should be utilised throughout the draining and purging process.

- The use of full-bore valves for depressurisation of the hoses should be avoided (for example 16” ESD v/v or double shut v/v’s on an LNGC) as this can introduce potentially damaging high velocities and rapid pressure changes, with consequential RPT, in sections of the hose.
- Wherever possible the use of small-bore bypass valves is advised (for example 1” to 3” depending upon the configuration).

15.17 Emergency Release (Hose) Couplings

Each liquid and vapour hose used for the ship-to-ship transfer is fitted on FSRU side with a cryogenic ‘dry break' emergency release coupling (ERC). The coupling is an emergency release device with internal double closure valves activated by an integrally mounted hydraulic release mechanism. The ERC are Class approved and are able to function with ice accumulation up to 25mm in accordance with IGC code requirements.

The 10” ERC is an improved system, hydraulically actuated, and features a ‘controlled closure-against- flow’ feature which certified and Class approved. The ERC will function against full rate flow to prevent release of LNG in the event of an ESD-2 actuation. The ESD-2 is integrated into the ESD-1 function to ensure ESD-1 occurs first.

15.18 Cargo Hose Support Saddles

Hose support saddles are specially designed and fabricated for use in supporting the cargo transfer hoses as they cross the manifold hand railing of both vessels. The saddles are designed to support the loads of the cargo hose with the LNG volume, maintain the minimum bend radius of the hose and manage the dynamic loads transferred to the vessels’ manifolds. The saddles shall be placed in the correct location by the crew of both vessels.

The FSRU will have hose saddles on board that shall be transferred to the manifold of the LNGC.

The saddles rigged on the cargo manifold of the FSRU contain a braking system to allow the safe automatic descent of the cargo transfer hoses in the event of an ESD-2 emergency disconnection.

Cargo Hose Support Saddle Specification

Primary material:	Seawater resistant aluminum ASTM 5083 (nonstructural) and 5383 (structural)
Plate thickness:	8mm (structural) 6mm (nonstructural)
Other materials:	Teflon sheet (3mm) in way of flexible hose, 400mm wide Wooden plate between saddle bottom and platform grating
Stability:	Provided by filling the bottom tank of each saddle with seawater, maximum 500mm depth - approximately 1 ton
Draining:	One large hole for quick draining while in place on manifold platform. Screw in plug accessible from manifold side One small plug (1/2”) for full draining in storage position
Securing / Horizontal:	By ratchet straps with rim fixed by clamps on the manifold gutter plate, with the rim running around the entire saddle
Weight:	738 kg dry and 1477 kg with water ballast.

The Master of each vessel shall ensure that their cargo engineering officer and crew are in attendance and confirm the following prior to beginning hose connection:

- No visible damage to the Teflon sheet that could damage hoses
- Bottom ballast tank of each saddle is filled with seawater
- Horizontal securing strap and putting blocks are in place
- Vertical securing straps and wooden floor-plate are in place with saddle properly adjusted for height
- The hose support saddle is stable

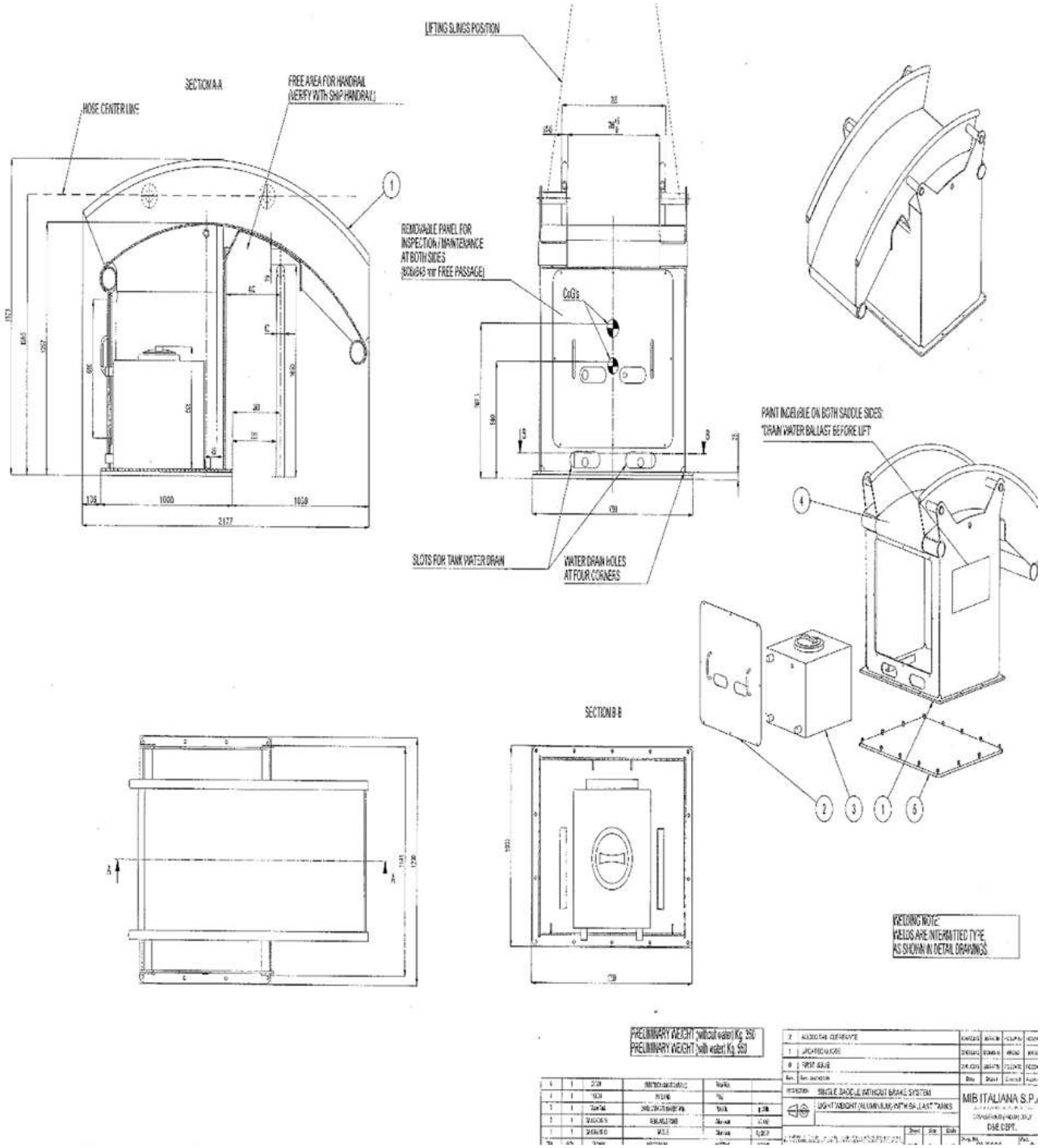
SECTION A-A
HOSE CENTER LINE
FREE AREA FOR HANDRAIL (VERIFY WITH SHIP HANDRAIL)
LIFTING SLINGS POSITION
REMOVABLE PANEL FOR INSPECTION / MAINTENANCE AT BOTH SIDES (800x845 mm FREE PASSAGE)
CoGs
PAINT INDELIBLE ON BOTH SADDLE SIDES: "DRAIN WATER BALLAST BEFORE LIFT"
SLOTS FOR TANK WATER DRAIN
WATER DRAIN HOLES AT FOUR CORNERS
SECTION B-B
WELDING NOTE:
WELDS ARE INTERMITTED TYPE AS SHOWN IN DETAIL DRAWINGS.
PRELIMINARY WEIGHT (without water) Kg. 350
PRELIMINARY WEIGHT (with water) Kg. 550
SINGLE SADDLE WITHOUT BRAKE SYSTEM
LIGHT WEIGHT (ALUMINIUM) WITH BALLAST TANKS
MIB ITALIANA S.P.A.
DSE DEPT.

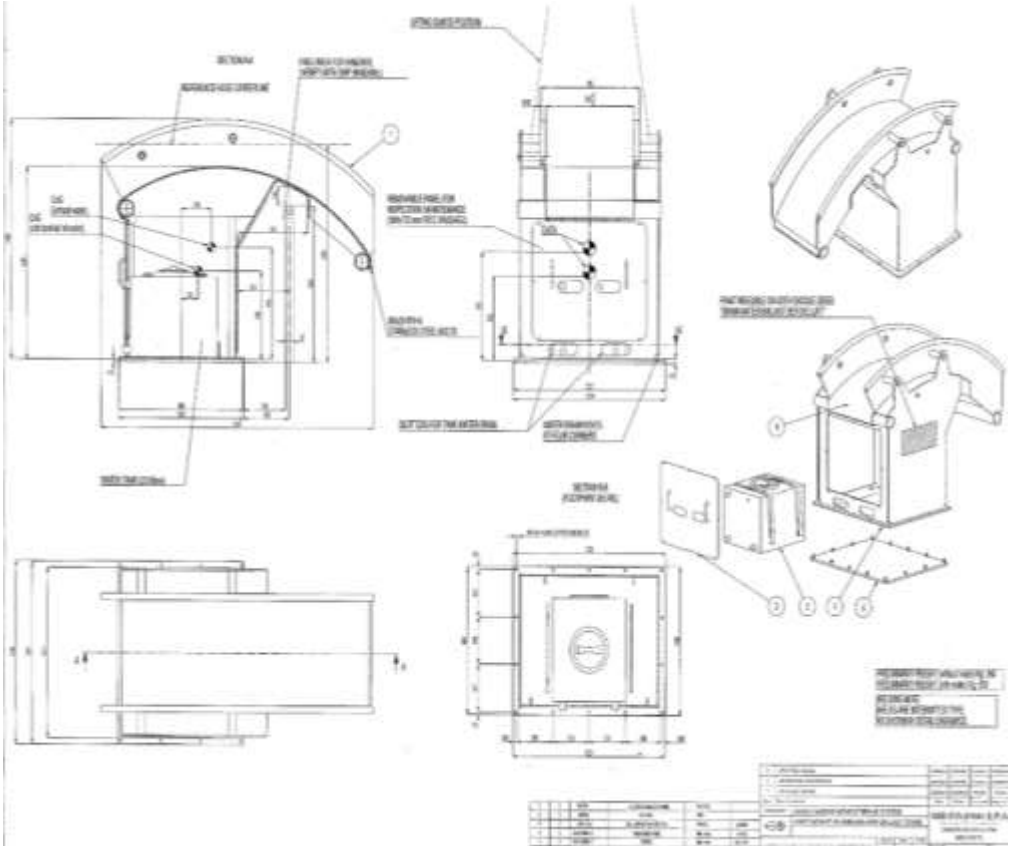

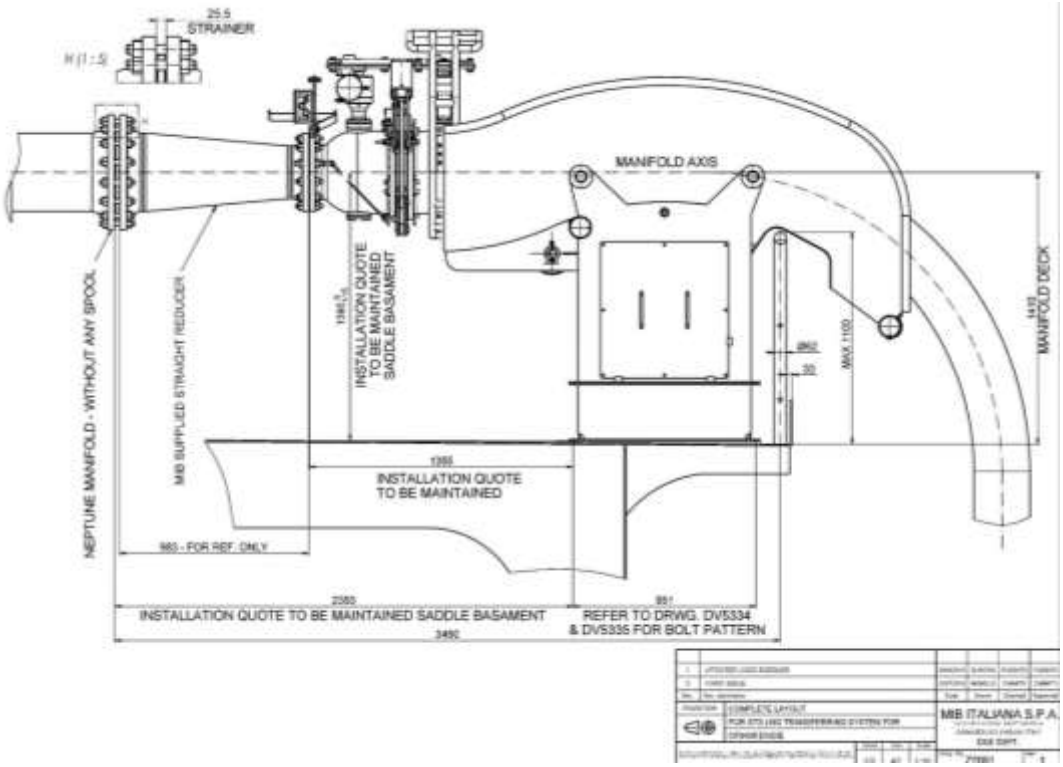
25.5
STRAINER
MANIFOLD AXIS
NEPTUNE MANIFOLD - WITHOUT ANY SPOOL
MB SUPPLIED STRAIGHT REDUCER
INSTALLATION QUOTE TO BE MAINTAINED SADDLE BASAMENT
INSTALLATION QUOTE TO BE MAINTAINED
965 - FOR REF. ONLY
MAX 1100
MANIFOLD DECK
INSTALLATION QUOTE TO BE MAINTAINED SADDLE BASAMENT
REFER TO DRWG. DV5334 & DV5335 FOR BOLT PATTERN
MB ITALIANA S.P.A.

15.19 LNG Cargo Hose Connection

STS equipment handling and hose connection shall be in compliance with the FSRU Cargo Operation issued to the LNGC by FSRU before arrival. It is of utmost importance that the instructions contained in the manual are followed by all personnel involved. The FSRU as receiving vessel leads all STS related operations from mooring to departure including Cargo operations.

The crew of both vessels shall avoid external damage and excessive bending involved in rigging the cargo transfer system in a manner similar to other types of STS operations. Since the crew of the LNGC shall be actively involved in the hose connecting operation lead by FSRU party, a copy of the STS Equipment Handling Manual for PRONAV shall be supplied to LNGC in advance of the operation. If the Master of the LNGC does not have the manual on board, it must be requested in advance of berthing.

The hose handling and connection process is done aboard the LNGC vessel. The LNGC must play an active part to support efficient cargo hose connection. Sufficient persons should be in attendance from the LNGC crew to assist the LNGC Cargo Officer and the FSRU personnel. The cargo hoses shall be disconnected and handled in accordance with procedures in the STS Equipment Handling Manual provided to the vessels. FSRU personnel will be transferred by crane to lead the connection work of the hoses onboard LNGC. Usually the cargo transfer hoses shall be connected starting with the first liquid manifold connection (L-1) and working aft until all hoses are connected. On the vapour manifold Y-piece is used.

Hose buns designed to support and protect the composite hose when lifted by the crane shall be provided by the FSRU. The vapour manifold “Y”-reducer, liquid line reducers, composite hoses shall be fitted between the respective liquid manifolds and the vapour manifold. Emergency release coupling are pre-rigged on FSRU side. The LNGC must present its Stbd manifolds in clean condition, free from damage and defects and with strainers in place on each liquid line. The FSRU will supply nine pieces of 16” new Metaflex gaskets between its LNGC vapour and liquid manifolds / strainers and between the 16” to 10” reducers.

The FSRU team will fit the 16" to 10" reducer spool pieces to each liquid and vapour manifold of the LNGC, all bolts will be in place and torqued according to manufacturer’s recommendations (approx. between 340 – 450 Nm). The FSRU shall supply six sets of 10” insulating flange gaskets sets & bolts, installed with a torque setting of 217 - 230 Nm, between each hose string and the 10” reducer flanges. The FSRU has option to use 10” QC/DC Rotacam couplings with integrated electrical insulation in lieu of bolted connections to the relevant spool pieces which have a Ra.0.2 polished surface for energized seal connection.

The torque settings are made under the supervision of the FSRU representative, and the responsible LNGC officer shall verify the torque settings on the LNGC manifolds. Liquid manifold connections not used for the cargo transfer shall remain blinded and secured with gaskets and bolts / nuts in all flange connection holes.

15.20 Vapour Line “Y” Piece and Liquid Line-Reducers’ Specifications

Primary material:	316 SUS Schedule 80
Pipe thickness:	16” ANSI 150, RF 10”
Flanges:	ANSI 150, RF 175 kg
	Permanent 6 mm SUS wire, tri-pod sling with lifting eye above center of gravity to maintain horizontal presentation
Weight:	
Lifting sling:	The FSRU shall supply and transfer the Vapour Line “Y”-piece, Liquid Line reducers to the LNGC and the guide pins or spuds (tapered bars with hand grips) are used to guide and align the hose flange bolt holes with the holes on the spool piece presentation flange.

FSRU Side:

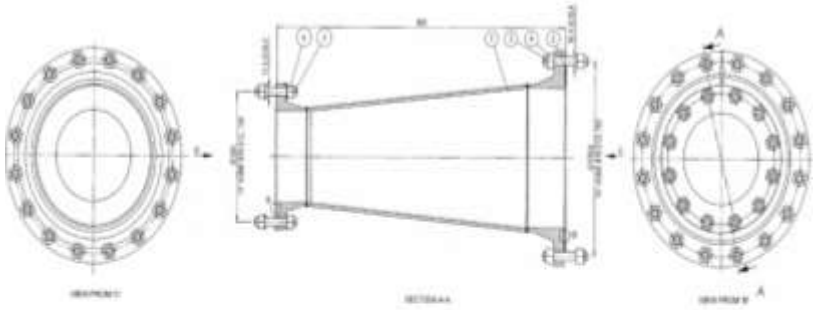

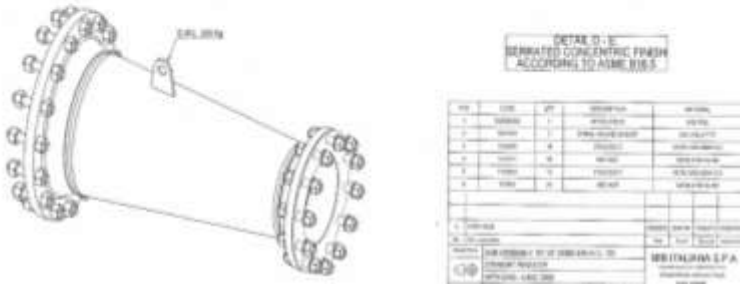
DETAIL D - E
SERRATED CONCENTRIC FINISH
ACCORDING TO ASME B16.5

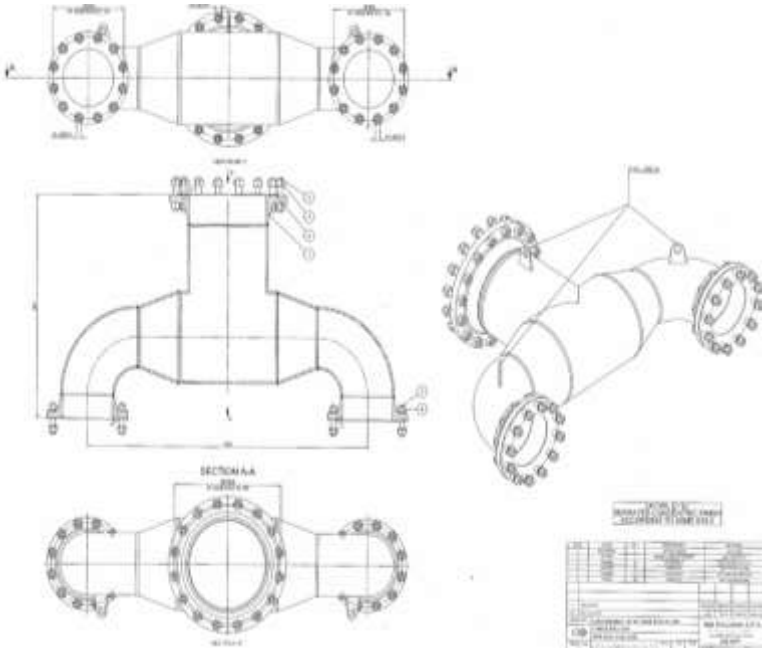
SECTION A-A

LNGC Side:

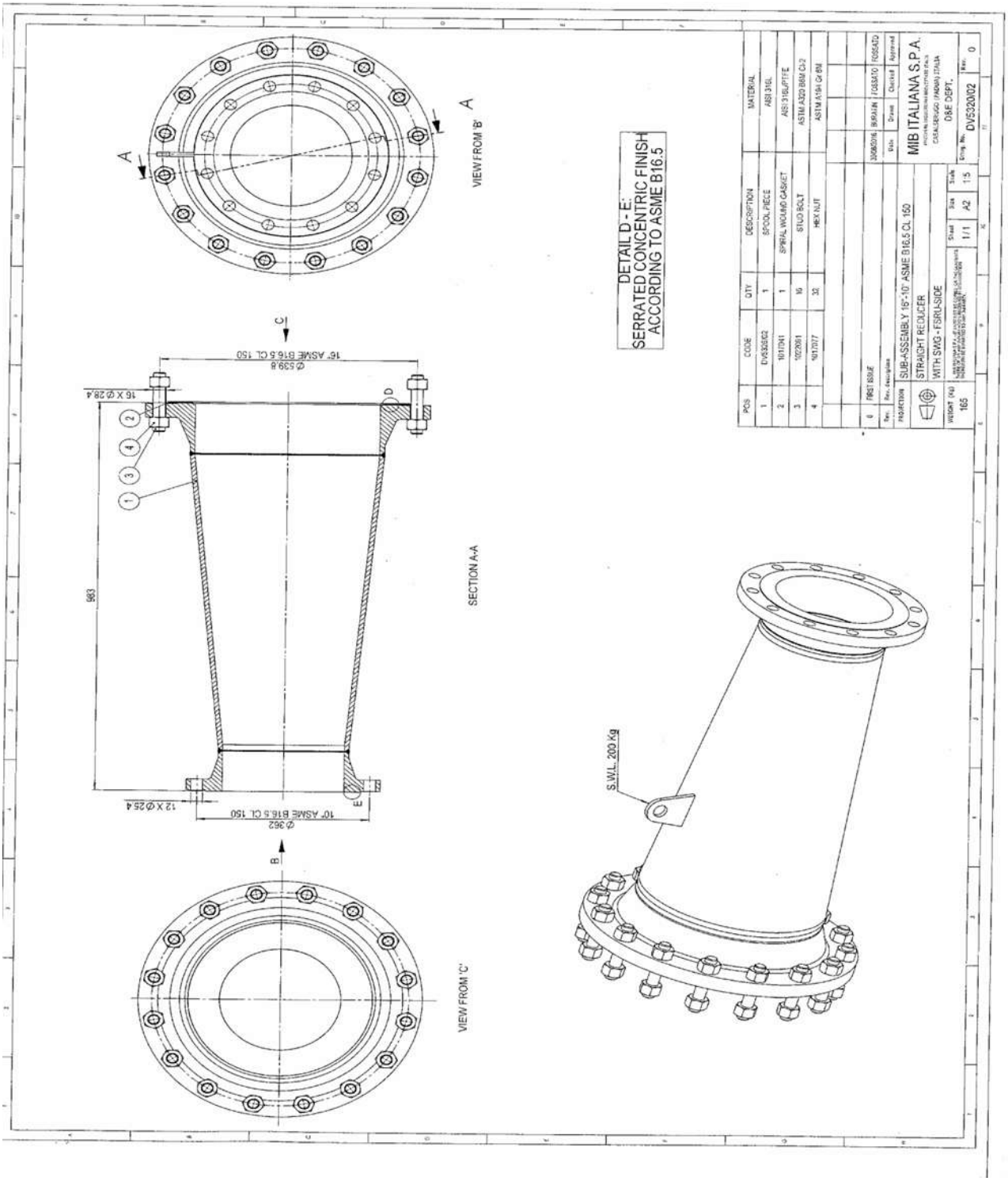
VIEW FROM 'B'
VIEW FROM 'C'
SECTION A-A
DETAIL D - E:
SERRATED CONCENTRIC FINISH
ACCORDING TO ASME B16.5
16" ASME B16.5 CL 150
10" ASME B16.5 CL 150
16 X Ø28.4
12 X Ø25.4
983
S.W.L. 200 Kg
POS
CODE
QTY
DESCRIPTION
MATERIAL
SPOOL PIECE
SPIRAL WOUND GASKET
STUD BOLT
HEX NUT
AISI 316L
AISI 316L/PTFE
ASTM A320 B8M Cl.2
ASTM A194 Gr.8M
FIRST ISSUE
SUB-ASSEMBLY 16"-10" ASME B16.5 CL 150
STRAIGHT REDUCER
WITH SWG - FSRU-SIDE
MIB ITALIANA S.P.A.
O&E DEPT.
DVE5320/02
WEIGHT (Kg)
165

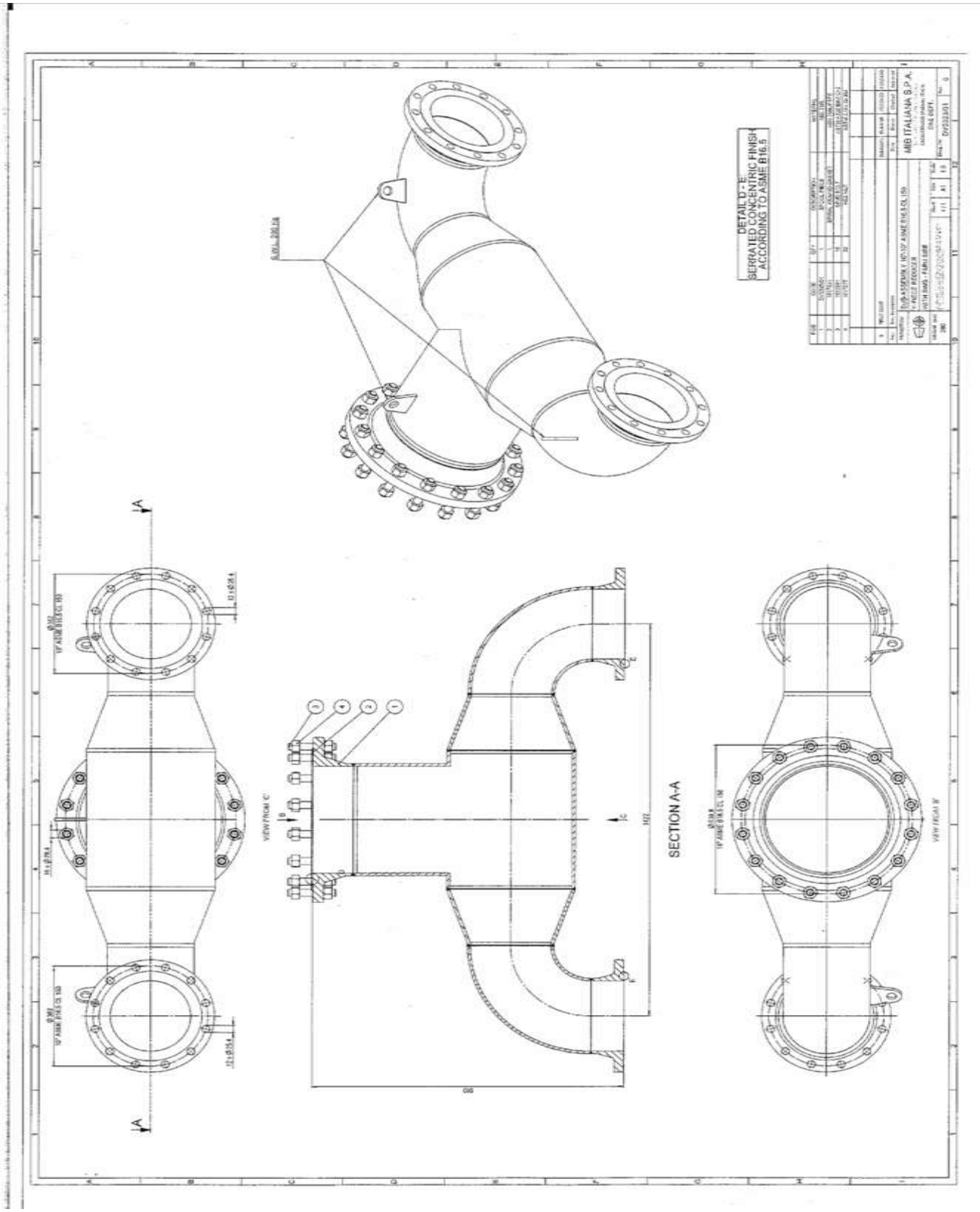
DETAIL D - E
SERRATED CONCENTRIC FINISH
ACCORDING TO ASME B16.5
SECTION A-A
VIEW FROM C
VIEW FROM F
MB ITALIANA S.P.A.

15.21 Cargo Hose Inerting and Flange Leak Test

The FSRU under the leadership of the POAC or his deputy (FSRU Chief Officer) will lead all cargo related operations. It is the responsibility of the LNGC Master or designated representative to cooperate closely with the FSRU during the entire operation. The responsibility for each vessels safety and operation remains with each individual Master. The POAC or his representative, however, may abort or correct the operation if safety procedures are not followed. His decisions will, if time allows, always be made in cooperation with the LNGC Master or his representative.

Once the cargo hoses are connected, the manifolds, spools and hoses shall be purged of oxygen using nitrogen supplied by the FSRU. The pressure shall be raised to 5 bars in the liquid lines and 1.0 bar in the vapour line. The pressure shall be maintained while a leak test is carried out on the flanged connections using a soapy water solution. Once the leak test has been completed the pressure shall be released to atmosphere by the LNGC and the hose atmosphere shall be tested. Purging is considered complete once the O2 is < 5%. All hoses shall be depressurized to 0,5-1.0 bar after the leak test and purge.

15.22 Warm ESD Test

In addition to any tests that may be carried out by the FSRU prior to the LNGC's arrival, ESD tests shall be conducted in conjunction with each arriving LNGC.

When both FSRU and LNGC have confirmed ready for test, one ESD shall be initiated from each vessel as per procedures. ESD procedure and sequence shall be agreed at the Pre-Cargo Transfer Meeting.

All valves and equipment connected to the ESD system must be operating properly when the ESD System is released. Upon completion of a successful ESD test, the cool down operation is ready to commence

16. CARGO TRANSFER OPERATIONS

16.1. Hose and Manifold Cooldown

During LNGC arrival pilotage and hose handling operations the cargo lines shall be cooled down up to the inboard manifold double-block valve in order to avoid the risk of LNG passing across an ESD valve during flanging operations. Line cooldown is considered to be complete once the fwd. and aft liquid cross-over lines are < -110°C. Line cooldown can commence during LNGC pilotage so long as personnel are available for safely conducting the operation. The line cooldown process shall be addressed during the vessel compatibility study and confirmed during the pre-transfer safety meeting.

During hose and line cooldown, the integrity of the hoses, flanged connections and the manifold area shall be closely monitored.

Cargo hose cooldown shall be initiated by the LNGC only after formal instruction to commence the process by the FSRU. The cooldown rate shall be controlled at all times and only increased following confirmation by the FSRU. A single LNGC spray pump shall be used to supply the cooling liquid. A second LNGC spray pump may be requested by the FSRU. Effective cooling is normally completed in 90 minutes. The LNGC must ensure that the manifold is manned by a competent officer at all times during the cooldown period.

The cooldown shall be conducted with the LNGC ESD valves open and the LNGC manifold double-block valves closed. The rate of cooldown shall be controlled with the cool down valves on the manifold coming from the spray header.

The liquid ESD manifold valves on the FSRU shall be opened. The LNG coolant shall pass through the FSRU ESD valves and shall be controlled by the FSRU to cool down its loading lines. Both the FSRU and LNGC shall ensure the correct lineup of their piping and valves throughout the cooldown and entire operation.

16.2. Cold ESD Test

Before initiating the cold ESD test both LNGC and FSRU shall confirm their readiness to each other to conduct this test. The FSRU, following a countdown will initiate the ESD. Both LNGC and FSRU will check their respective ESD valves for proper closure. Closing time of both LNGC and FSRU valves are to be recorded. Only one ESD is required. One ESD is initiated from the LNGC and one from the FSRU (Pyle and Optical) and the opposite during warm test.

16.3. Cargo Transfer

The FSRU will be in charge of the cargo transfer due to the FSRU being the receiving and production facility. The cargo operation will be executed in careful cooperation between the LNGC and the FSRU.

Prevention of Rollover procedures are incorporated into FSRU's cargo operation manual and must be complied with at all times. These procedures are based upon best industry practice and SIGTTO recommendations.

The FSRU and the LNGC will line up respectively for the cargo transfer. When all parties have completed the cargo pipe lineup and are ready for cargo transfer, both FSRU and LNGC Officers in charge of transfer will acknowledge to each other that cargo transfer can commence.

One of primary variables that dictate the LNG cargo transfer rate is the regasification rate of the FSRU into the pipeline. The LNG cargo transfer rate may have to be reduced in order to control FSRU tank pressure and levels within operating limits.

STS cargo transfer is designed for a maximum rate of up to 9,000 m^3/hour and the maximum manifold pressure on the LNGC side is 5.0 bars. The Master of the LNGC is not to issue a letter of protest if the maximum rate of 9,000 m^3/hour has been achieved, or if the maximum manifold pressure of 5.0 bars or mutually agreed loading rate has been reached.

During the LNG cargo transfer a constant and careful monitoring of the tank pressures must be maintained throughout. To maintain tank pressure on the LNGC BOG from the FSRU may be returned via the vapour system utilizing the pressure difference.

Simultaneously with the cargo transfer the LNGC will be ballasting and the FSRU will be de-ballasting accordingly. Both the FSRU and the LNGC must have a stability plan prepared for this operation.

Ramping up and down rates shall be discussed at the pre-transfer meeting. However, the ramping up can be slowed down if either party feels uncomfortable with the situation. Normal ramp up is expected to take one (1) hour.

Starting cargo transfer and subsequent increases in transfer rate shall be authorized by the FSRU to ensure that tank pressures are managed in a safe manner.

During the transfer, an hourly exchange of information shall take place between the vessels. This shall include (but not limited to) cargo transfer rate, tank pressure, cargo ROB quantities, mooring line status, etc. The ramping down process shall be discussed and agreed to at the pre-transfer safety meeting.

16.4. Vapour Management

The operational limits and set points for the STS procedure will be agreed during pre-discharge meeting however LNGC shall arrive with LNG at a saturation pressure of no more than 140 mbar(g) in its tanks.

It should be noted that the FSRU may operate at a higher average tank pressure than the visiting LNGC and will monitor its own cargo tank pressures throughout the STS transfer.

Two 10” vapour hoses, connected via a “Y” single piece on each vessels manifold. Vapour will only be returned to the LNGC via vapour manifold on free flow basis. The FSRU shall normally open the vapour return line at the beginning of operations and it shall remain open throughout.

It is the responsibility of the LNGC to monitor the pressure in its own tanks and piping ensuring to keep the FSRU informed. In the event that pressure in the return gas line falls to 80 mbar(g) or below, or if vapour return from the FSRU is not available, then the LNGC, as the responsible party for vapour management of its cargo tanks, should produce LNG vapour using its own LNG vaporizer, or in agreement with the FSRU, adjust its unloading rate until pressures return to normal levels. The LNGC must ensure that its LNG vapouriser is pre-warmed and on standby prior to berthing / cargo operations.

The vapour return shall normally be controlled by the LNGC; however, flow may be controlled by FSRU when requested by the LNGC Master or Chief Officer. It is important that the LNGC communicate efficiently and very closely with the FSRU in regards to its Vapour Management requirements as the LNGC may operate at lower tank pressures than the FSRU. The responsibilities of the vapour management shall be agreed at Pre-Transfer meeting and recorded in the STS checklist and the FSRU to LNGC information exchange pack process manager responsibilities.

The operational pressure on the FSRU may vary accordingly due to the regassification requirements of the terminal. This process should not normally affect the LNGC whatsoever. The FSRU operates with a MARVS setting of 700mb and frequently operates with tank pressure from 250mb to above 450mb, thus it is incumbent on the LNGC Master / Chief Officer to control the vapour return rate, volumes and velocities to the LNGC by throttling its vapour return valve. Any changes to the vapour return must be made only after the FSRU control room have been informed.

It is important that FSRU Cargo Control Room is immediately informed if there is any problem or suspected problem of difficulty with the LNGC managing its own cargo tank pressures or if any concerns arise from receiving return gas from the FSRU, it is the responsibility of the LNGC Master to ensure that swift communications are conducted to prevent or reduce event escalation and in order that the FSRU can manage vapour pressure in the FSRU cargo tanks in a timely manner by other means (e.g. Recondenser, MSO compressor or gas combustion unit), and if possible assist in supplying additional vapour return to the LNGC as the conditions may require.

16.5. Topping Off

Topping off shall occur at the pre-agreed reduced rate, one tank at a time. A topping off rate of 500- 800m^3/hr is normally agreed upon.

On occasion when the FSRU needs to load to maximum capacity and fill its tanks to 98.6% approx., increases in FSRU tank pressures are inevitable and appropriate gas management procedures shall be implemented to control the pressure / rate of vapour return and recondensing of BOG. Adequate precautionary measures shall be taken in order to avoid use of the GCU's and avoid the risk of any possibility of uncontrolled venting.

16.6. Stripping / Heeling Out

Heeling out operations are permitted in certain circumstances, only when commercial terms and conditions have been agreed between all parties. Under no circumstance should the contractual lay time be exceeded due to the heeling out operation unless otherwise agreed with and approved by the Terminal Operator.

The LNGC must ensure that cargo spray / stripping pumps are be started in ample time if the LNGC intends to heel-out (strip) cargo tanks. This shall ensure cargo consolidation can be completed if the main cargo pump loses suction.

The minimum LNG liquid level accounted in the custody transfer is the height of liquid, where the accuracy equal to or better than plus or minus five (±5) millimeters over the relevant measurement ranges of the cargo tanks as outlined in the calibration table of the vessel. Any liquid level below the minimal height may not be accounted for, therefore it is usually recommended to heel-out with some level of innage remaining.

Heeling out operation shall be discussed during the pre - discharge meeting and vessels shall limit their trim to less than 3.0m throughout the stripping / heeling out operation

16.7. Cargo Hose Drain and Purge

Once the cargo transfer operation has been completed, the ESD valves on the manifold of the FSRU shall be closed. On the LNGC the double-block valves shall be closed while the ESD valves remain open.

Open to allow draining of the vertical risers and cargo transfer hoses. All cargo transfer hoses shall be drained from the FSRU towards LNGC. The FSRU manifold nitrogen supply is provided by small bore piping from its onboard N2 system.

Draining shall be conducted by repeatedly pressurizing the hoses using nitrogen until the pressure reaches four (4) to five (5) bar and then opening the LNGC manifold ESD bypass valves until the hoses are liquid free. During this operation sea water spray shall be directed onto the LNG hose bight (catenary) to speed up de-icing and vaporization of remaining LNG in the hose. As the LNG boils-off, the line pressure increase will assist in displacing liquid in the lines. Both vessels shall conduct the drain and purge operation together.

Cargo hoses shall continue to be purged with nitrogen until they contain an atmosphere of less than 2% methane by volume or 40% LEL. Hoses may then be disconnected, blind flanges installed and the hoses passed back to the FSRU.

16.8. Cargo Hose Disconnection

The LNGC must play an active part to support efficient cargo hose disconnection. Sufficient persons should be in attendance from the LNGC crew to assist the LNGC Cargo Officer and the FSRU personnel. The cargo hoses shall be disconnected and handled in accordance with procedures in the STS Equipment Handling Manual provided to the vessels.

After disconnection, each hose flange shall be blanked prior to returning the hose to the FSRU. The manifold ESD by-pass valves on the FSRU shall be partially open to prevent any pressure build up in the cargo transfer hoses.

16.9. Closing Custody Transfer Measurement

On completion of draining of the cargo hoses and confirmation that all the LNGC's manifolds are closed, closing CTMS may commence.

The independent surveyor shall be present at the closing of CTMS.

The representatives of interested parties same as on opening CTMS will be ready on board on completion of cargo calculation and agreement of the cargo quantity transferred to sign the documents which shall be prepared onboard the LNGC.

Engine room fuel meters, GCU counter and other 'consumers' shall be recorded at the start of closing CTMS. In addition to standard CTM prints, the LNGC should provide screen prints from the control system to demonstrate vapour handling on board the LNGC for engine room, GCU or reliquefication unit consumption.

16.10. Removal of ESD Cable

The ESD Cable should be disconnected after the cargo hoses have been disconnected and water curtains are secured.

16.11. Pilots

Pilots must be ordered no later than one (1) hour before the LNGC's intended departure time.

If the order for the pilot is placed a significant time before the one (1) hour pilot order deadline, LNGC Master should ensure that the pilot order is reconfirmed one (1) hour before the intended departure time.

17. ACCESS BETWEEN THE FSRU & LNGC

17.1. Security Berth/LNG Carrier Access Control

No person other than the pilots, customs officials, immigration officer, Ship's Agent, Maritime Authorities or Terminal Representative is allowed to board or disembark from the LNG Carrier until clearance has been obtained from the Maritime Authorities having jurisdiction over the Terminal and the LNG Carrier.
No entry to shore is allowed via the FSRU.

No personnel, stores etc. must board the LNGC from sea-side without pre-agreement with Terminal manager.

The Terminal Operator, among other things:

- reserves the right to request that personnel produce personal identification,
- reserves the right to escort to or from the LNG Carrier any visitors or persons whose conduct may present a hazard to personnel or Terminal property,
- reserves the right in order to ensure that the Terminal Regulations are being observed to board the LNG Carrier at any time with a nominated person.
- has the sole responsibility of controlling access to the Terminal area and the Exclusion Zone. LNG Carrier crew personnel access to the Terminal is not permitted without prior approval from the TERMINAL DIRECTOR. If it is permitted, it will be exclusively with a Terminal personnel escort.

17.2. Access Between the FSRU and LNGC

The FSRU is fitted with a 1 tonne SWL / 4-person personnel transfer basket. The personnel transfer basket will land in the vicinity of the LNGCs cargo manifolds as identified and confirmed in the pre-arrival compatibility checks. It shall be noted that the Transfer Basket is only utilized for cargo related transfers. Visitors, crew, stores, on/off signers, luggage etc. are not allowed to be transferred with the crane.

On completion of mooring, the Pilot and LNGC's Master will confirm to the FSRU Master that the LNGC is securely moored ("All Fast") and has received Port Clearance from relevant Authorities so that the personnel transfer basket can now be operated and land on the LNGC's deck.

Due care and caution shall be exercised when transferring personnel between vessels using the personnel transfer basket. The FSRU STS crane shall be utilized to lift this basket shall be certified for transferring personnel, both the crane operator and supervisor shall be appropriately trained and qualified.

Before landing the personnel transfer basket on to the LNGC, a responsible LNGC's Officer must agree with the FSRU Officer who operates the equipment that it is safe to land the personnel transfer basket. Thereafter boarding of FSRU personnel can take place.

17.3. FSRU Crane Activities

The FSRU is fitted several cranes, with a dedicated STS crane located forward of the Port manifold used for equipment transfer and for use with the personnel transfer basket, this is the only crane which will be used between the LNGC and FSRU.

The FSRU Stbd crane(s) may be used for limited periods during STS operations. The FSRU shall ensure that simultaneous crane operation does not take place at any time during the STS. All other FSRU cranes are restricted from use until the STS transfer is complete.

18. LNG CARRIER EMERGENCY ESCAPE

The following pertains to emergency escapes:

A pilot ladder or accommodation ladder or combination shall be rigged or positioned on the outboard side of the LNG Carrier. The appropriate arrangement shall be swung outboard ready for immediate lowering in case an emergency escape is required.

The port side lifeboat, if fitted and unless it can depart from a stowed position with all personnel inside, shall be lowered to the embarkation level or be ready for immediate use in case of emergency.

The FSRU POAC or Chief Officer as designated and a Terminal Representative will review with the LNG Carrier Master during the pre-transfer meeting emergency evacuation arrangements, including reciprocal arrangements in case of the need to evacuate the Terminal and remove the LNG Carrier from the berth. Only the POAC (FSRU Master) or the LNGC Master can give the order to release the LNGC from the FSRU. Only the FSRU Master can give the order to release the FSRU from the Jetty and in what sequence.

19. SECURITY ISPS

All security related questions should be addressed to the Terminal Representative.

The Terminal Representative will act as “deputy port facility security officer” (DPFSO) and is authorized to sign the "Declaration of Security" which shall be signed also by the LNG Carrier security officer or the Master and will concur with the LNG Carrier security officer on any additional security measures in case the LNG Carrier or Terminal is at a security level other than 1. The LNG Carrier could be at a higher security level than the Terminal, but never at a lower level.

Declaration of Security will be signed between LNGC and FSRU at the pre-transfer meeting.

20. SAFETY

20.1. Introduction

The safety requirements have been developed based on OCIMF (ISGOTT), SIGTTO and other industry accepted standards. The FSRU Master and the LNG Carrier's Master are ultimately responsible for the safety of their own vessels. The LNG Carrier’s Master and crew MUST take all necessary safety precautions (whether or not so advised by the Terminal Representative), keeping in mind the hazards of LNG discharge operations, weather conditions and any other circumstances requiring special care or caution.

The main engine shall be kept ready for immediate use. Running any tests on the main engine of the LNG/C is not allowed during STS operations. Repairs are not allowed while alongside the FSRU. Any urgent repairs may only be undertaken with written form approval from the TERMINAL DIRECTOR and the FSRU POAC.

Repairs which are restricting the maneuverability of the vessel may only be carried out and will be conditional on the Master hiring sufficient standby tugs to move the vessel if so required. All consequential costs resulting from repair work carried out on the vessel while it is moored at the Terminal shall be borne by the vessel.

Should the repair works represent a risk for the terminal or should the conditions of the approval be compromised, the TERMINAL DIRECTOR may require that the vessel be removed from the berth at the owners’ costs. ME test prior departure on LNGC to be carried out only once all mooring lines are released from hooks and LNGC is clear from fenders but still under assistance of tugs (once "Cast Off" time is given by FSRU).

21. HAZARD SITUATIONS & EMERGENCY RESPONSE

The FSRU will provide a copy the FSRU contingency plans to the LNGC. These shall be returned after STS at the Post-Transfer Meeting. They will give the LNGC a guide to what action to take should an emergency occur. In addition, there are emergency plans for the terminal as per below:

The Masters shall at all times retain sufficient crew on board to operate their vessels in compliance with the vessel's safe manning certificate.

21.1. Fire and Safety

21.1.1. Repair Work and Maintenance

No boiler cleaning, chipping, scaling and scraping of steel work or work likely to cause sparks shall be undertaken on any vessel (and no iron or steel hammers or other instrument capable of causing sparks shall be used for the purpose of opening or closing hatches), unless the previous written permission of the TERMINAL DIRECTOR has been obtained and permission of ETKİ LNG TERMINAL.

21.1.2. Engineer on Duty

In addition to the supervision required on deck a competent Engineer must be on duty in the engine room and or boiler room at all times whilst the vessel is berthed of the Terminal. Engine watchkeeping shall be maintained as determined by the relevant vessel's Chief Engineer / Master.

21.1.3. Excessive Funnel Smoking

Soot blowing and excessive funnel smoking is prohibited and immediate steps must be taken to eliminate sparking from funnels. GCU's and other exhaust systems screening for spark and flame prevention must be in good order. At no time should any flame or sparks be visible from the funnel.

21.1.4. Fire and Fire Fighting

For an emergency on shore, jetty or FSRU, an alarm shall be raised. The ETKİ LNG TERMINAL facility signals and emergency by giving the sound of siren. Refer to Emergency Contact and Signals for further details.

21.1.5. Fire Fighting Equipment

Vessel(s) shall be adequately manned at all times for firefighting and for vacating the berth in case of an emergency. The following firefighting precautions shall be ready:

- Fire hoses to be run out fore and aft, ready for use
- Fire main must be under pressure
- Dry chemical extinguishing equipment of adequate capacity must be stationed near the vessel's manifold

21.1.6. In the Event of a Fire Ashore

All cargo operations and/or ballasting operations must be stopped immediately and the Master shall prepare the vessel for immediate departure and shall be in close contact with the FSRU POAC, TERMINAL DIRECTOR or Terminal Representative. Master may request assistance from the Fi-Fi tugs available in the port for cooling ship's hull and deck.

21.1.7. In the Event of Fire Aboard

Advise jetty operator, FSRU / LNGC as applicable and sound the alarm. Shutdown cargo operations and activate the water deluge as necessary.

In case of fire on board of a vessel at the ETKİ LNG TERMINAL facility, the responsibility for firefighting onboard remains with the Master. The vessel Master may request assistance from the Fi-Fi tugs available in the port.

Generally, the fire brigade will be on the scene first and will on request of the Master assist in combating the fire. Refer to ANNEX CCC Fire Notice for further details.

21.2. Emergency Towing Wires

There is no obligation to rig the fire wires if the LNGC is fitted with suitable sunken bitts, available at both laden and ballast drafts.

21.3. Venting Gas to Atmosphere

Venting of natural gas to atmosphere is not permitted during normal operations. The need for emergency venting shall be avoided, except in an emergency safety case. Such other measures to control tank pressures such as GCU use / steam dumping operations and / or controlled venting should be avoided and / or minimized through the process of effective tank pressure management throughout the entire STS operation. The use of 'consumers' on board the FSRU or LNGC to increase engine load to consume gas can be utilized as agreed with the necessary parties.

In the case of emergency controlled venting, the gas shall be heated (if possible) and cold venting avoided. All cargo related safety vents, valves and associated fittings must be in good order and correctly rigged. It is the responsibility of the LNGC to ensure that tank and pipeline pressures are controlled at all times and the release of excess pressures via safety valves in an uncontrolled manner be avoided.

The water spray deluge systems shall be in use and all ventilation systems on recirculation mode in the accommodation and all other ventilation units secured during any venting event.

21.4. Thunderstorms/Electrical Storms & Suspension of Operations

Lightning hazards may be associated with several severe weather conditions. During periods when lightning/ thunderstorms pose a threat, personnel shall be expected to use prudent judgment and proceed indoors and withdraw from exposed locations. When lightning/thunderstorms are in close proximity to LNG/CNG transfer operations, operations may be temporarily halted until determined that the lighting strikes no longer pose a hazard to personnel working outdoors. Transitions in operations may represent moments of increased risk. Careful evaluation of the circumstances and potential for release of gas should be considered when determining whether to shut down or continue cargo transfer operations with electrical storm activity in the vicinity. It is to note, shutting down ReGas operations may pose increased risks and therefore may dictate that continuing ReGas operations to be the safest course of action. In the case of STS cargo transfers, the transfer shall be suspended until the lighting passes. During the suspended period, the cargo transfer hoses may be maintained cold by use of a small spray/stripping pump.

The vessel Master is responsible for the safety of the vessel and is responsible for the actions necessary to protect the vessel. Masters should take into account weather factors associated with the lightning / thunderstorms as well as the potential increased risk of gas release during a ReGas plant shutdown. It is the Masters decision to stop or continue ReGas operations.

21.5. Personnel Emergency Escape

The vessel's offshore lifeboat shall be ready for immediate lowering as an emergency escape means for personnel.

An accommodation/pilot ladder rigged on the offshore side of the vessel shall be ready for immediate lowering as means of escape in the event of an emergency.

Personnel working on the ETKİ LNG Terminal shall normally use the jetty to evacuate toward the shore but in cases where they are trapped, they should consider boarding the FSRU as a means to escape.

21.6. High Pressure (HP) Gas Fire

Gas leaking from a pipeline under pressure, if ignited, will give rise to a jet flame. The first action to be taken in case of a high-pressure leak is to isolate the leak and secure the source of gas. Activation of the Emergency Shutdown (ESD) system is the preferred method of action, as the systems are designed to fail safe or shut down into a safe condition.

The action taken to manage high pressure leak or fire shall include:

- Activation of the ESD system on the FSRU;
- Isolate and secure the gas source;
- Dispersing or controlling the vapour cloud;
- Securing potential sources of ignition;
- Activation of the FSRU's high pressure gas blow down system.

In some cases, if ignition has occurred and the fuel source has been isolated and secured, it may be best to allow the gas fire to burn itself out. Adequate spray and/or deluge of water to protect adjacent structures is needed to provide thermal protection.

Dry Chemical (Ansul-brand Purple-K® or similar) is the preferred agent for extinguishing gas fires under pressure. It is of prime importance to consider the ability to secure the fuel source for all gas fires before extinguishment is attempted. A gas fire consuming fuel in one location that can be managed is a far better consequence than a gas cloud that may find an ignition source somewhere else.

21.7. Natural Gas Fire

Natural Gas fires can occur when LNG is released, warmed up, forms a vapour cloud that mixes with an oxygen sufficient atmosphere (the mixture can neither be too lean or too rich) and then comes in contact with an ignition source. Natural gas fires can be either an "open" type fire, where the vapour cloud is open to the surrounding environment, or the "closed" type where the vapour cloud is held within a confined space such as an enclosed compartment or furnace, or both. The resultant size of a vapour cloud after a LNG release is directly proportionate to the amount of LNG released.

In any case, if a natural gas fire breaks out, the first action is to secure the source of fuel to the fire, then create a means of cooling adjacent equipment and exposures using large volumes of water spray. Evacuate personnel as necessary. The decision should be made whether to attempt to extinguish the fire or let it burn itself out.

Category I Fire

A Category I gas fueled fire is identified as a fire that will probably remain contained, within the specific area of origin, has a limited fuel supply, and does not possess the ability to spread further.

The action taken to manage Category I Natural Gas Fire shall include:

- Primary Firefighting Equipment typically utilized is hand portable dry chemical firefighting extinguisher(s).
- Water Spray and/or water deluge systems may be employed for thermal protection of personnel and surrounding structure (s). Additional water spray may be provided by the FSRU's firefighting monitors.
- Confirm limited fuel supply source to decide whether to extinguish the fire or allow total consumption of available fuel (burn-out).

Category II Fire

A Category II gas fire is identified as a fire that has migrated outside of the area of origin or initial containment area, has a substantial fuel supply, and if not addressed quickly, could develop into a Category III gas fire. Emphasis on managing unnecessary exposure of unprotected personnel and risk of escalation should be of paramount importance.

Emergency response requires containment of the fire and management of the fuel supply source. This will usually be accomplished by isolation of the involved piping or system and controlled vaporization of the LNG released that will typically be associated with this category fire.

The action taken to manage Category II Natural Gas Fire shall include:

- Primary Firefighting Equipment typically utilized is fixed firefighting extinguishing equipment such as total flooding CO2 systems or large dry chemical systems capable of managing substantial fire threat utilizing protected response personnel.
- Hand portable firefighting equipment must be available as back-up.
- Water Spray and/or water deluge systems may be employed for thermal protection of personnel and surrounding structure (s). Additional water spray may be provided by the FSRU's firefighting monitors.
- Consider additional resources external to the FSRU such as local offshore service vessels to assist.
- Confirm fuel supply source to decide whether to extinguish the fire or allow total consumption of available fuel (burn-out).

In any case, after extinguishment of a Category I or II fire:

- A re-flash watch shall be set and adjacent structural cooling shall continue;
- All involved or damaged equipment or systems shall be inerted/isolated;
- A damage assessment of the involved equipment or system shall be made;
- A determination of the root and secondary cause(s) of the fire, including the source of the fuel leak and location of the ignition source shall be made;
- Corrective actions to prevent recurrence shall be taken before cargo operations are allowed to resume.

Category III Fire

A Category III gas fueled fire is identified as a fire of catastrophic proportion that has major or total involvement of the FSRU. With a Category III fire, personnel evacuation and preservation of life is of utmost importance.

Although, the FSRU involved in a Category III gas fueled fire may be saved from total constructive loss, it is beyond the capability and resources of the FSRU and ETKİ LNG TERMINAL personnel. ETKİ LNG TERMINAL Terminal's response to catastrophic Category III gas fueled fire shall be to manage the resources necessary to facilitate the evacuation of ETKİ LNG TERMINAL personnel and the FSRU crew at the Master's request. This evacuation of personnel shall include the employment of the FSRU's lifeboats and life rafts, service vessels in the vicinity, ETKİ LNG TERMINAL Authority, and or other qualified local response services.

21.8. LNG Spill / GNG Release

LNG is a cryogenic liquid, hazardous to personnel due to low temperature. LNG does not burn. Any LNG released to atmosphere will warm and vaporize into Gaseous Natural Gas GNG. GNG is a non-toxic, flammable gas, lighter than air at ambient temperatures. In an open atmosphere/non-contained condition, GNG is non-explosive. The flammable limits of GNG in air are between 5 % and 15 %. There may be slight variation to the flammable limits due to the actual composition of the GNG.

The action taken to manage an LNG Spill/GNG Release may include:

- The use of water spray as the primary means of liquid vaporization and vapour cloud control.
- The source of the LNG/GNG release shall be immediately isolated and secured.
- Consideration to force vaporize the LNG with water taking into account prevailing wind conditions and ability of response personnel to control the direction of movement of the GNG vapour cloud that will be generated.
- Consideration to activate the FSRU's water deluge system and/or water spray from support vessels to provide protection to personnel, vessels and/or support structures as well as provide control of vapour cloud movement and vaporization of LNG.

21.9. Cryogenic Burns - Cold Liquid Contact

The effects of cold liquid upon the skin are very rapid and can cause frostbite and freezing. The injury received can be severe, can occur in seconds, and is the same as a burn injury of 1st, 2nd, or 3rd degree.

Indications

- 1st degree injuries can cause numbing of the skin which may turn white in color. Skin may feel stiff to the touch, but underlying tissue is still soft.
- 2nd degree injuries can cause skin to turn white or blue in color and feel hard and frozen. The underlying tissue is still undamaged, blistering is likely.
- 3rd degree injuries can cause skin to be white, blotchy, and/or blue in color. The underlying tissue is hard and cold to the touch.

Treatment

- Immediately flush affected areas with clean, cool water.
- Wrap affected areas with loose, clean bandages.
- Do not rub affected areas. Seek immediate medical assistance.

Precautionary Measures

The adverse effect of LNG upon the skin can be minimized by utilizing the proper personal protective equipment (PPE). These items include but are not limited to:

- Rain Slickers / Foul Weather Gear

- Face shields and goggles
- Hard hat
- Rubber coated gloves
- Rubber boots

22. THREAT TO SURROUNDING AREA / EVACUATION ROUTES

The area surrounding the ETKİ LNG TERMINAL is largely populated. An incident at the terminal, FSRU and/or attending LNGC could pose a threat to public safety, hazard/damage to property and/or significantly disrupt key assets located within that area.

In the event that an uncontrolled emergency poses a threat to the general public or vessel transit route, ETKİ LNG TERMINAL Management will recommend that an off-site evacuation be ordered.

When the order to evacuate is received, ETKİ LNG TERMINAL Management shall alert local law enforcement and emergency response agencies to organize a public evacuation of the areas surrounded by the impacted area. ETKİ LNG TERMINAL Authority shall assist in determining the impacted waterways, necessary broadcasts to mariners, and any necessary additional safety zones and / or waterway restrictions. The evacuation should be in the most direct route away from the incident

23. ENVIRONMENTAL PROTECTION

23.1. Prohibition of Pollution

The release of pollutants at the ETKİ LNG TERMINAL facility and within the port is strictly prohibited. Soot emission and any excessive exhaust emissions from the funnel or exhaust lines are prohibited.

23.2. Ballasting / De-Ballasting

As long as the vessel is moored at the berth, only designated ballast tanks may be utilized for ballast operations.

23.3. Tank Cleaning/Gas Freeing

Tank cleaning and/or gas freeing operations are prohibited while alongside the FSRU.

23.4. Product Spillage and Leakage

Prior to any handling of cargo or bunkers, all scupper holes shall be plugged in such a manner as will make them leak proof. All pipes, valves, connections and fittings, etc. used for handling cargo shall be kept free from leakage.

When transfer operations have been completed, the cargo transfer hoses shall be drained, purged and disconnected in accordance with the Cargo Hose Handling Manual. Drip trays shall be used when flange connections are leaking.

If a product spillage occurs, the spill shall be contained, area cleaned and refuse shall be disposed by a method agreed by the TERMINAL DIRECTOR. Under no circumstances shall product be washed or swept overboard.

All product spillage whether on to the deck of the vessel or into the sea must be reported immediately to the jetty operator who will contact the responsible ETKİ LNG TERMINAL departments. The concerned officer of ETKİ LNG TERMINAL will visit and observe the spillage / prepare spillage report for onward submission to ETKİ LNG TERMINAL higher authorities. Every possible action must be taken by the vessel to stop spillage, reduce spreading and recover the product.

23.5. Bilge and Sewage Discharge

The discharge of bilge and sewage effluents, oil, or any mixture containing oil to the sea is strictly prohibited. Bilge overboard valves shall be visibly locked and sealed shut. The list of locked sealed valves is to be forwarded to the Terminal Representative.

23.6. Discharging Material Overboard

It is strictly prohibited to throw any material, papers, waste or goods either solid or fluid overboard.

23.7. Bathing / Swimming / Fishing

Bathing / swimming / fishing will not be permitted from the platform and approaches or from the vessel whilst berthed at the Terminal.

ANNEX AAA - NAVIGATION CHART FOR ETKİ LNG TERMINAL

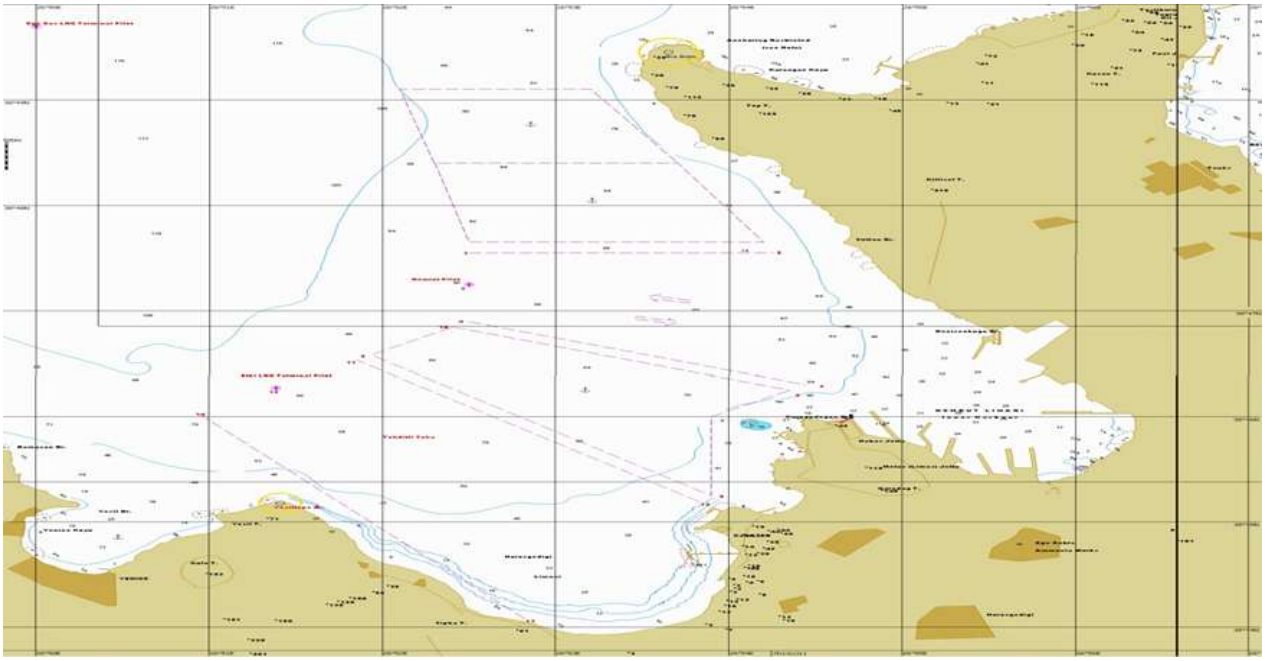

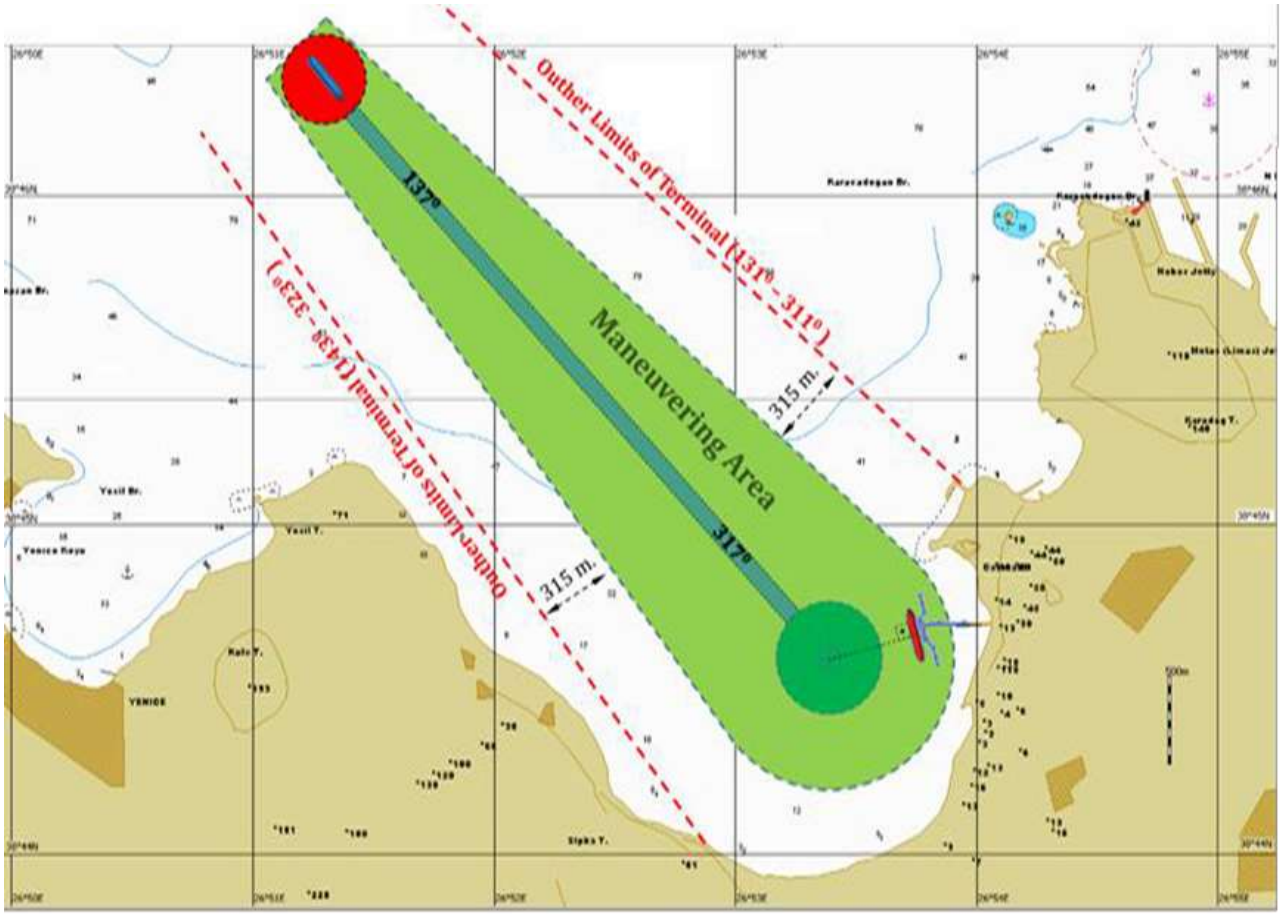

ANNEX BBB - FSRU - GENERAL ARRANGEMENT

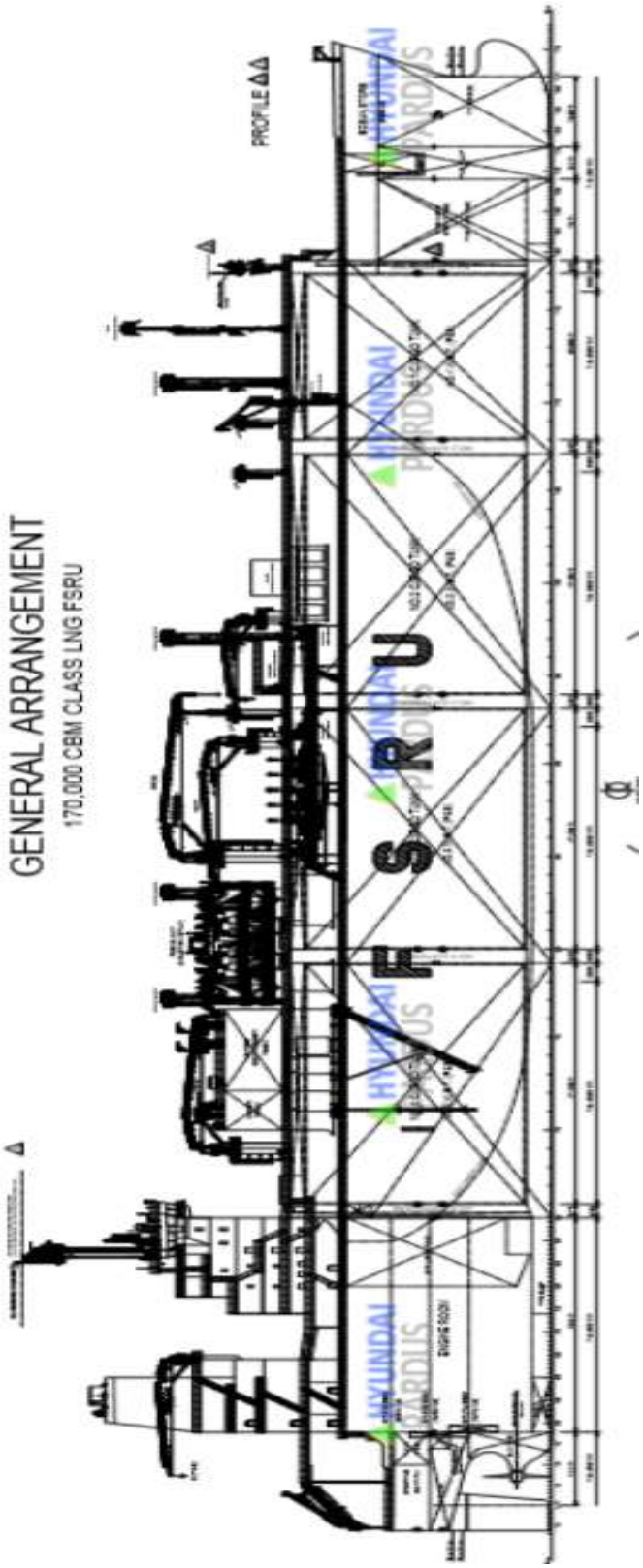

ANNEX CCC - FIRE NOTICE

IN CASE OF FIRE "DO NOT HESITATE TO RAISE THE ALARM"

TERMINAL FIRE ALARM
At this Terminal, the fire alarm signal is:
Alarm Case = Continuous alarm
Back to normal = One continuous alarm.

IN CASE OF FIRE
- Sound one or more blasts of the ship's whistle each blast of not less than second duration supplemented by a continuous sounding of the general alarm system.
- Contact the terminal: Walkie-talkie "VHF" communication channel 2 Provided by the EVTL and FSRU via radio / hotline phone.

ACTION by SHIP
Fire on Your Ship:
- Raise Alarm
- Fight fire and prevent fire spreading
- Inform Terminal
- Cease all cargo operations and then close all valves
- Standby disconnect hoses or arms,
- Bring engines and crew to standby, ready to unberth.

Fire on other ship or ashore:
- Standby, and when instructed:
- Cease all cargo operations and then close all valves
- Disconnect hoses or arms (FSRU HP arms)
- Bring engines and crew to standby, ready to unberth

ACTION by TERMINAL
Fire on a Ship:
- Raise Alarm
- Contact Ship
- Cease all cargo operations and then close all valves
- Standby disconnect hoses or arms
- Standby to assist fire fighting
- Inform all ships
- Implement Terminal emergency plan Fire ashore:
- Raise alarm
- Cease all cargo operations and then close all valves
- Fight fire and prevent fire spreading
- If required standby to disconnect hoses or arms
- Inform all ships
- Implement Terminal emergency plan

IN THE CASE OF FIRE AT THE TERMINAL, TERMINAL PERSONNEL WILL DIRECT THE MOVEMENT OF VEHICULAR TRAFFIC ASHORE.

ANNEX DDD - RECEIPT OF TERMINAL REGULATION FOR VESSELS

To

LNG._____(Name of Vessel)

Dear Sir,

Please acknowledge the receipt for Terminal Regulations for Vessels by signing of this letter.

Signed_____Master / Chief Officer

(_____)

Date_____Time_____

ANNEX EEE - TERMINAL PASSES

			TIME OUT	**REASON**		

Signed_____

(_____)

(_____)

Master / Chief Officer Date & Time

Terminal Representative Date & Time

Note: Ship crew to show shore passes & necessary documents before leaving/entering the terminal, photocopies to be attached.

ANNEX FFF - CONDITIONS OF USE for LNG CARRIERS

ETKİ LNG TERMINAL

Conditions of Use for LNG CARRIERS

Annex - FFF

to ETKI LNG TERMINAL INFORMATION AND REGULATIONS for FSRU and LNGC

CONDITIONS OF USE

All facilities and assistance of any kind whatsoever provided by the ETKI LNG Terminal Management or its Representative/s to LNG carriers visiting ETKI Terminal for any purpose whatsoever are subject to the following Conditions of Use (Conditions). These conditions are applicable regardless of whether or not any or all charges/costs are paid or are actually or impliedly due from or on account of any visiting vessels of any flag. Without prejudice to the generality of the foregoing, the following shall be deemed to have been specifically accepted by any vessel visiting Etki LNG Terminal regardless of whether such acceptance is specific, in writing or otherwise.

For the purpose of these Conditions, the following definitions or interpretations shall apply:

1. Interpretations and Definitions

1.1 “Terminal” means the FSRU, the jetty, the onshore pipeline send-out facilities, and related supporting facilities positioned at Aliaga, Izmir, Turkey.

1.2 “Terminal Facilities” means all the infrastructure, equipment and installations at the Terminal which includes, but is not limited to, channels, channel markings, buoys, jetty, gangway or the unloading facilities.

1.3 “Terminal Interests” means (i) the owner of the jetty, the onshore pipeline send-out facilities, and related supporting facilities positioned at Aliaga, Izmir, Turkey and its Affiliates, (ii) the FSRU Services Provider and its Affiliates, (iii) the owner and operator of the FSRU and their respective Affiliates, (iv) all persons employed at or providing services at the Terminal other than any person providing services to the LNG Carrier and (v) the employees and agents of the foregoing.

1.4 Terminal Operator” means “ETKI LNG TERMINAL” representing the Terminal Interests.

1.5 “Terminal Services” means any service rendered by the Terminal or by the Terminal Representative/s which included, but is not limited to, mooring or unmooring or raising or lowering of the loading lines or loading or discharging or otherwise, but excluding pilotage and towage services which are provided by third party in line with local regulations.

1.6 “FSRU” means vessel built as a floating storage and regasification unit.

1.7 “FSRU Service Provider” means PRONAV Ship Management GmbH & Co. KG.

1.8 “LNG Carrier or Ship” means the LNG Carrier or vessels using the Terminal Facilities that is party to these Conditions.

1.9 “Owner” means the owner and/or operator and/or manager and/or charterer of the LNG Carrier or Ship.

2. Master's Responsibility

The Master of an LNG Carrier calling at the Terminal is solely responsible on behalf of the Owner for the safe navigation and operation of the LNG Carrier. Nothing contained in Terminal Regulations relieves a Master of his responsibilities including taking precautions to prevent:

- fire / LNG release
- tank over pressurization or vacuum
- grounding and damage to Terminal Facility
- environmental pollution

The Master remains at all times fully responsible for the LNG Carrier and for its complement, including crew and any supernumeraries. The Terminal (including its servants, agents and contractors) shall, in any way, not be responsible for the availability or provision of support services contracted by or on behalf of the LNG Carrier with parties other than Terminal and not included in the Port Charges.

3. Agency

Terminal and its personnel do not perform any LNG Carrier agency functions. The LNG Carrier's Owner must arrange for a Ship's Agent or any other local agency Services. It is recognized that a representative of the agency may need to board or be onboard the LNG Carrier.

4. Government Officials

It is recognized that Turkish government officials may need to attend onboard the LNG Carrier within Terminal or the premises of the Terminal and that these may include:

- Customs Officer, Immigration Officer, Sanitary Officer
- Maritime Authorities' representative / Coast Guard

The LNG Carrier or the Ship's Agent should advise the Terminal when such need arises.

5. Anti-Pollution

It is the responsibility of the LNG Carrier's Master to prevent pollution and to ensure that the LNG Carrier complies with all applicable laws and regulations in relation to cargo, bunkers, bilge water, sewage, dirty ballast, plastics, garbage, or any other materials that may cause pollution of the sea or atmosphere. The LNG Carrier must have in place a Shipboard Oil Pollution Emergency Plan (SOPEP) approved by its flag state and have records to substantiate that the personnel onboard have received training and are proficient in responding to emergency situations.

Any fines imposed by any administration or government for pollution arising from or caused by the LNG Carrier or for which the LNG Carrier is liable for under any applicable law, together with all costs of cleaning up any pollution emanating from or caused by the LNG Carrier, shall be for the account of and remain with the LNG Carrier and the Owner.

6. Terminal Hours of Operation

Subject to the prevailing and expected sea and weather conditions, and at the full discretion of the Harbour Master or representative of Terminal, for all movements of LNG Carriers in the navigation channel the Terminal is restricted to daylight hours only for berthing.

7. Marine Terminal Closure

Terminal Representative may direct the suspension of the Terminal operations due to adverse prevailing or expected sea or weather conditions or otherwise based upon the decision by the Harbour Master with consultation of the Terminal Director. The Terminal will keep the LNG Carrier informed about the times during which the Terminal operations are to remain suspended. LNG Carriers required to leave the Terminal during periods of Terminal closure must maintain contact with the Terminal via VHF so as to be ready and available when the Terminal becomes operational again. The Terminal (including its servants, agents and contractors) shall not be in any way be liable for any financial losses whatsoever as a result of delay, suspension or refusal to permit cargo operations under this clause.

8. Port Services

8.1 All movements in the navigation channel and the Terminal inclusive of berthing, mooring, and unmooring operations are to be conducted with the Terminal Management's approved Pilot(s) on-board. Notwithstanding the presence of a Pilot, the Master always remains in command of the LNG Carrier and is responsible for its safe navigation and operation. The Terminal shall not be responsible for any injury or death of personnel, loss or damage to the Ship whatsoever irrespective of whether the same is direct or indirect which is related to the use of the Terminal Services and Facilities by the Ship regardless of any act omission fault or neglect on the part of the Terminal.

8.2 without prejudice to the generality of the foregoing, the Terminal shall not be responsible for:

(i) any loss or damage to the Ship;

(ii) or any loss of or damage to property, personal injury or death suffered by the Master, Officers or Crew while in Terminal,

Irrespective of whether such loss is direct or indirect and all claims, damages and costs arising therefrom, the Owner of the Ship shall hold harmless and indemnify the Terminal Interests from and against any claim, cost or expense arising from the same save to the extent such claim, loss or expense arises from the sole fault or neglect of the Terminal Interests.

8.3 The Terminal shall not be responsible to the ship for any loss related to strikes or other labor disturbances whether the Terminal, its Servants or Agents are parties thereto or not.

8.4 Except to the extent caused or contributed to by Terminal's sole fault tor negligence, the Owner shall hold harmless and indemnify the Terminal Interests from and against any claim, cost or expense arising from:

8.4.1 any loss suffered by the Terminal with respect to damage to the Terminal Facilities, injury or loss of life of its personnel which is related to the use of the Terminal by the Ship and which involves the fault, wholly or partially, of the Master, officers or crew, including negligent navigation;

8.4.2 any loss suffered by third parties with respect to damage to their property, loss of life or injury to their personnel which is related to the use of the Terminal by the Ship and which involves the fault, wholly or partially, of the Master, officers or crew, including negligent navigation;

8.4.3 any loss suffered by the Terminal with respect to a hazard under paragraph 11 hereof;

9. Drugs and Alcohol

As part of the prequalification requirements before the LNG Carrier is permitted to call at Terminal the Owner of the LNG Carrier must have in place an effective drug and alcohol abuse policy, a copy of which must be posted onboard. This drug and alcohol abuse policy must meet or exceed the standards specified in the OCIMF 'Guidelines for the Control of Drugs and Alcohol Onboard LNG Carrier'. Whilst the LNG Carrier is within the Terminal operational limits, this drug and alcohol abuse policy must be strictly observed and the LNG Carrier's Master must ensure that no restricted drugs (other than those in the medical locker) are onboard and that no alcohol is used or is available for use.

The crew of the LNG Carrier must have a zero-blood alcohol level within Terminal area.

10. Visitors attending the LNG Carrier

The LNG Carrier (including its Owner and Master) shall be responsible for ensuring that all visitors attending within the Terminal premises, including representatives of Users, Terminal, independent surveyors and Ship's Agents, fully comply with the Terminal Regulations and other procedures. The Terminal personnel that need to attend or remain onboard the LNG Carrier during berthing and off-loading operations shall be provided with food and accommodation of the standard usually provided for the LNG Carrier's senior officers.

11. Removal of Wrecks

If the Ship or any object on board becomes, or is likely to become, an obstruction, threat, or danger to navigation, operations, safety, health, environment or security of the Terminal (a "hazard'), the Master and the Owner shall, at the option of the Terminal Management, take immediate action to clear, remove or rectify the hazard as the Harbour Master may direct, or the Terminal Management shall be entitled to take such measures as it may deem appropriate to clear, remove or rectify the hazard and the Master and Owner shall be responsible for all costs and expenses associated therewith.

12. Provision of Services

12.1 Compliance with laws: all services, facilities and assistance provided by or on behalf of Terminal, its servants or contractors their parent companies, subsidiaries, or affiliates, or its or their servants, agents, or contractors whether or not any charge is made by Terminal thereof are provided subject to the Port and Terminal Regulations and all applicable laws and regulations for the time being in force.

12.2 The Terminal Representative on LNG Carrier: the services of the Terminal Representative are provided to the LNG Carrier with the express understanding and condition that the Terminal Representative becomes for such purposes the agents/servant of the LNG Carrier (including its owners, operator and charterers) and the Terminal (including its servants, agents and contractors) shall not in any way be liable for any loss, damage or personal injury (of any nature whatsoever including death) incurred by any person whomsoever, resulting from or in any way contributory to or connected with, the advice or assistance given or for any action taken by the Terminal Representative, whether negligent or otherwise.

12.3 LNG Carrier Navigation: in all circumstances, the Master of the LNG Carrier shall remain solely responsible on behalf of its Owner for the navigation and operation of the LNG Carrier. save to the extent set out in paragraph 8.4 above, the Terminal (including its servants, agents and contractors) shall in no circumstances whatsoever be responsible or liable for any loss, damage, or delay arising whether directly or indirectly from any assistance, advice or instructions whatsoever given or tendered in respect of any vessel whether by way of the provision of navigation facilities (including berthing aids) or otherwise howsoever and irrespective of neglect on the part of the Terminal.

13. Changes to the Conditions of Use

By signing these Conditions of Use, the LNG Carrier including its Owner and Master are bound by the Conditions of Use then in force and any changes that:

- were already scheduled to come into force and for which advance notice has been given
- arise from the coming into force of new legal or statutory provisions or regulations issued by the Port Authority or other competent bodies that have, or may have, a direct or indirect influence on the Terminal or its operation; such new provisions or regulations shall be applied fully from the date of their entry into force. Where changes to any part of the Conditions of Use are made no compensation of any sort shall be due.

14. Pollution

The LNG Carrier shall be entered with the International Tanker Owners Pollution Federation Limited (ITOPF). For any oil pollution caused by the LNG Carrier, its Master, or crew, the LNG Carrier and its Owner shall protect, defend, indemnify, and hold harmless Terminal Interests from and against any loss, damage, liability, suit, claim, or expense arising there from.

15. Parties and Related Parties

It is hereby expressly agreed that no servant or agent of Terminal Interests shall be under any liability whatsoever for any loss, damage, or delay of whatsoever kind arising or resulting directly or indirectly from any act or neglect or default on its part while acting in the course of or in connection with its employment. Without prejudice to the generality of the foregoing provisions in this Article, every exemption, limitation, condition, and liability herein contained and every right, exemption from liability, defense, and immunity of whatsoever nature applicable to Terminal Interests or to which Terminal Interests are entitled hereunder shall also be available and shall extend to protect every such servant or agent of Terminal Interests acting as aforesaid, and for the purpose of all the foregoing provisions of this clause, Terminal Interests are or shall be deemed to be acting as agent or trustee on behalf of and for the benefit of all persons who are or might be their servants or agents from time to time, and all such persons shall to this extent be or be deemed to be parties to this agreement.

16. Limits of Liability

The Owner must procure that each Ship carries the following insurance tor so long as it accesses, operates or is situated within the Terminal:

(a) hull and machinery insurance covering hull and machinery, collision liability, removal of wreckage and institute war and strikes insurance for not less than the following amounts:
  (i) hull and machinery (including institute war and strikes) - replacement value;
  (ii) removal of wreckage - replacement value; and
  (iii) collision liability - replacement value,

containing terms at least equivalent to London ITC 1983 conditions; and

(b) marine protection and indemnity insurance (which may be constituted by membership of a P&I Club of the International Club of P&I Clubs) which covers:
  (i) liability for pollution (including from equipment supplied by the Owner of the Ship); and
  (ii) incidents such as collision (covers collision liabilities not covered under the hull and machinery insurance) and removal of wreckages, for the maximum limit available (on reasonable commercial terms) from a recognized P&I Club but not less than:
  (iii) oil pollution liability - US$1,000,000,000; and
  (iv) all other liability - US$150,000,000

The Owner must give to the Terminal evidence of the insurance policies as soon as practicable on request.

17. These Conditions of Use shall be construed, interpreted and applied in accordance with English Law. All disputes or differences arising out of or in connection with these Conditions of Use or any service to be provided under same shall be referred to arbitration in London, such arbitration to be conducted under the current terms of the London Maritime Arbitrators' Association (LMAA). Provided that, where the amount in dispute does not exceed the sum of USD 200,000 (or such other sum as the parties may agree) any dispute shall be resolved by a sole arbitrator in accordance with the Small Claims Procedure (SCP) of the LMAA.

18. Except to the extent expressly preserved in this Agreement, the Ship and the Owner hereby expressly, voluntarily and intentionally waive any rights to limit their liability under the Limitation Convention 1976, as

amended by the Protocol of 1996, or any other similar law or convention (and including any modifications, amendments and extensions thereto) applicable in the Republic of Turkey or any subdivision thereof but always limited in all circumstances to US $150,000,000. Such waiver shall include any right to petition a court, arbitral tribunal or other entity for limitation of liability, any right to claim limitation of liability as a defense in an action, and any other similar right under relevant law.

19. The liability of the Owner, the Ship and the Master to the Terminal Interests arising out of the operation of these Conditions of Use shall be limited in all circumstances to US $150,000,000 for any one accident or occurrence.

Dated: _____

LNG VESSEL'S

Name IMO No.:

LNG/C MASTER'S

Name Signature & Stamp:

FSRU MASTER'S

Name Signature & Stamp:

TERMINAL OPERATOR

Represented By: Signature:

*** Pilot will not moor any vessel to ETKİ LNG Terminal wharves unless they have the Master's signature on the acknowledgement below.